INVITATION TO BID
FOR THE CONSTRUCTION OF 2-STOREY 4-CLASSROOM SCHOOL BUILDING AT DEL ROSARIO HIGH SCHOOL, BGY. DEL ROSARIO

1. The *City Government of Naga*, intends to apply the sum of *Nine Million Nine Hundred Ninety Seven Thousand Nine Hundred (P 9,997,900.00)*, being the Approved Budget for the Contract (ABC) for the construction of the following infrastructure project**:**

No.	Contract Reference Number	Name of Project and Location	Approved Budget for the Contract (ABC)	Contract Duration (calendar days)	Equipment Required	Source of Fund	Cost of Bid Documents
1	008523-2022-08	Construction of 2-storey 4-Classroom School Building at Del Rosario High School, Bgy. Del Rosario	9,997,900.00	150	concrete mixer, compactor, welding machine	Special Education Fund-Surplus 2021	10,000.00

Bids received in excess of the ABC shall be automatically rejected at bid opening.

2. The *City Government of Naga* now invites bids for the above Procurement Project. Completion of the Works is required *150 calendar days*. Bidders should have completed a contract similar to the Project. The description of an eligible bidder is contained in the Bidding Documents, particularly, in Section II (Instructions to Bidders).

3. Bidding will be conducted through open competitive bidding procedures using non-discretionary "*pass/fail*" criterion as specified in the 2016 revised Implementing Rules and Regulations (IRR) of Republic Act (RA) No. 9184.

4. Interested bidders may obtain further information from *City Government of Naga and inspect the Bidding Documents at the address given below from 8:00AM to 5:00PM*.

5. A complete set of Bidding Documents may be acquired by interested bidders on *Thursday, November 10 to December 2, 2022* from the BAC Secretariat, Room 208 Second Floor, City Hall Building, City Hall Compound and www.naga.gov.ph and www.philgeps.gov.ph; *and upon payment of the applicable fee for the Bidding Documents, pursuant to the latest Guidelines issued by the GPPB, as stated above*. The Procuring Entity shall allow the

bidder to present its proof of payment for the fees *will be presented in person.*

6. The *City Government of Naga* will hold a Pre-Bid Conference on Fri*day, November 18, 2022, 3:00PM at the City Procurement Office, Ground Floor, City Hall Building, City Hall Compound, which shall be open to prospective bidders*.

7. Bids must be duly received by the BAC Secretariat through manual submission at the BAC Secretariat, Room 208 Second Floor, City Hall Building, City Hall Compound on or before 9:00AM on Friday, December 2, 2022. Late bids shall not be accepted.

8. All bids must be accompanied by a bid security in any of the acceptable forms and in the amount stated in **ITB** Clause 16.

9. Bid opening shall be on Friday, December 2, 2022, 10:00AM at the City Procurement Office, Ground Floor, City Hall Building, City Hall Compound. Bids will be opened in the presence of the bidders' representatives who choose to attend the activity.

10. Additional information:
    a) An Annual Registration Fee of Three Thousand (P 3,000.00) Pesos is required.
    b) Forms in the PBD should be used in submitting proposals and should remain unaltered.

11. The *City Government of Naga* reserves the right to reject any and all bids, declare a failure of bidding, or not award the contract at any time prior to contract award in accordance with Sections 35.6 and 41 of the 2016 revised Implementing Rules and Regulations (IRR) of RA No. 9184, without thereby incurring any liability to the affected bidder or bidders.

12. For further information, please refer to:

    ENGR. ALEXANDER N. CANING
    Acting City Engineer, City Engineer's Office
    1st Floor City Hall Building, City Hall Compound, J. Miranda Avenue
    Concepcion Pequena, Naga City 4400
    Mobile Number: +639175801165
    Email address: bac@naga.gov.ph, alexandercaning@gmail.com
    Website: www.naga.gov.ph

13. For downloading of bidding documents, you may visit the following websites: www.philgeps.gov.ph / www.naga.gov.ph

    Date of Issue: November 10 to 17, 2022

PROJECT ID.NO : 0

PROPOSED TWO-STOREY, FOUR-CLASSROOM SCHOOL BUILDING

LOCATION: DEL ROSARIO HIGH SCHOOL, BRGY. DEL ROSARIO, NAGA CITY

PERSPECTIVE

NOT TO SCALE

REPUBLIC OF THE PHILIPPINES
OFFICE OF THE BUILDING OFFICIAL

NAGA CITY

LAND USE & ZONING

LINE & GRADE

ARCHITECTURAL

CIVIL/ STRUCTURAL

ELECTRICAL

MECHANICAL

SANITARY

PLUMBING

ELECTRONICS

GEODETIC ENGINEER

	PROJECT TITLE	PLANNING & DESIGN SECTION:	PROJECT ENGINEER	RECOMMENDING APPROVAL:	CONCURRED BY:	APPROVED BY:		SPECIAL PROJECT TEAM/ PLANNING & DESIGN	SHEET NO.
REPUBLIC OF THE PHILIPPINES OFFICE OF THE CITY ENGINEER CITY OF NAGA	PROPOSED TWO (2) STOREY, FOUR (4)-CLASSROOM, SCHOOL BUILDING LOCATION: DEL ROSARIO HIGH SCHOOL, BRGY. DEL ROSARIO, NAGA CITY	JENIFFER P. TOLARBA ARCHITECT IV	JEMAEL S. TABINAS ENGINEER II	EMMEL M. ADAQUE ENGINEER III		ALEXANDER N. CANING ACTING CITY ENGINEER	NELSON S. LEGACION CITY MAYOR	KIM R. REFUGIO	A1 A/2

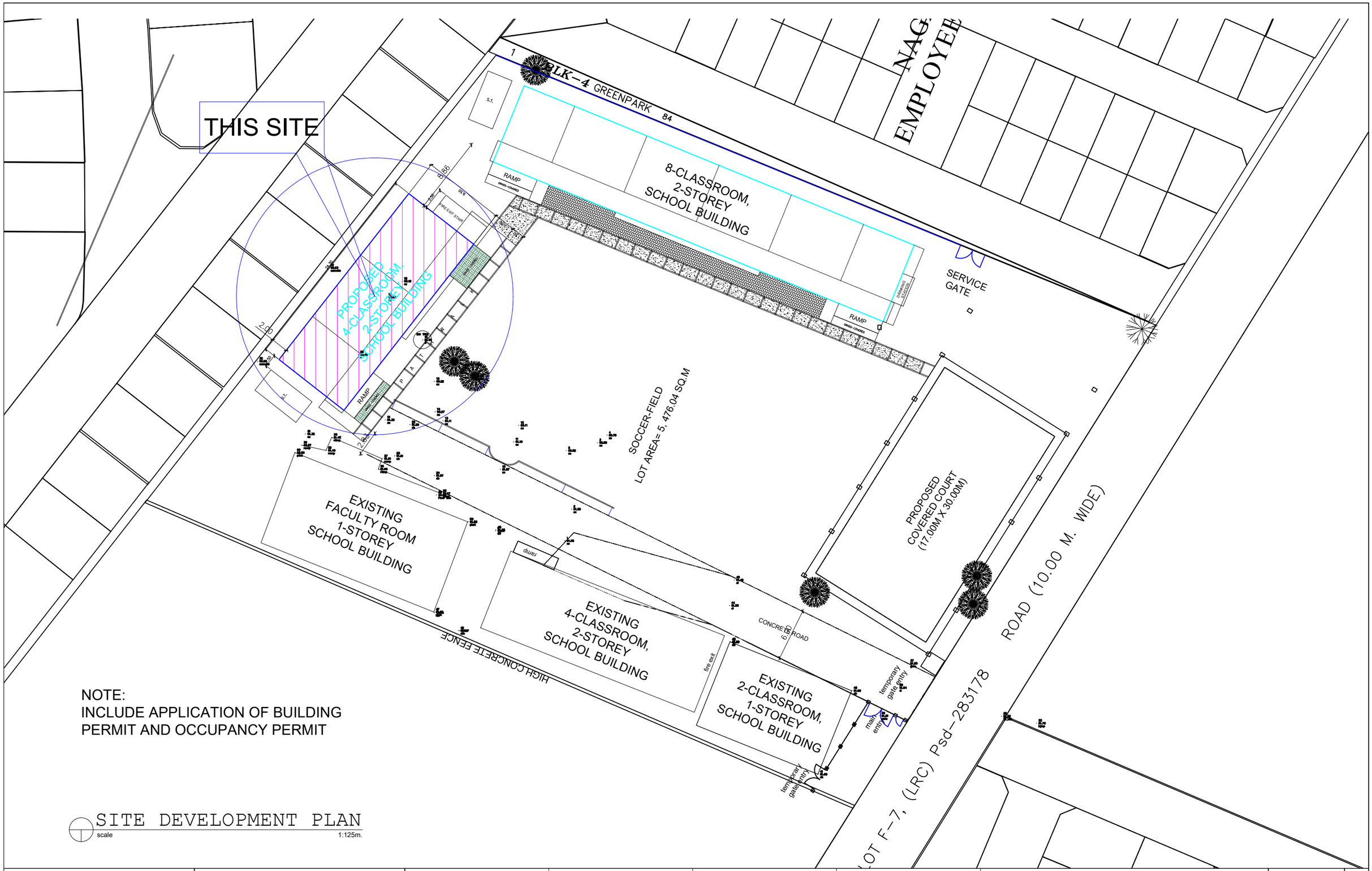

NOTE:
INCLUDE APPLICATION OF BUILDING PERMIT AND OCCUPANCY PERMIT

SITE DEVELOPMENT PLAN
scale 1:125m.

	PROJECT TITLE	PLANNING & DESIGN SECTION:	PROJECT ENGINEER	RECOMMENDING APPROVAL:	CONCURRED BY:	APPROVED BY:		SPECIAL PROJECT TEAM/ PLANNING & DESIGN	SHEET NO.
REPUBLIC OF THE PHILIPPINES OFFICE OF THE CITY ENGINEER CITY OF NAGA	PROPOSED TWO (2) STOREY, FOUR (4)-CLASSROOM, SCHOOL BUILDING LOCATION: DEL ROSARIO HIGH SCHOOL, BRGY. DEL ROSARIO, NAGA CITY	JENIFFER P. TOLARBA ARCHITECT IV	JEMAEL S. TABINAS ENGINEER II	EMMEL M. ADAQUE ENGINEER III		ALEXANDER N. CANING ACTING CITY ENGINEER	NELSON S. LEGACION CITY MAYOR	KIM R. REFUGIO	A2 A10

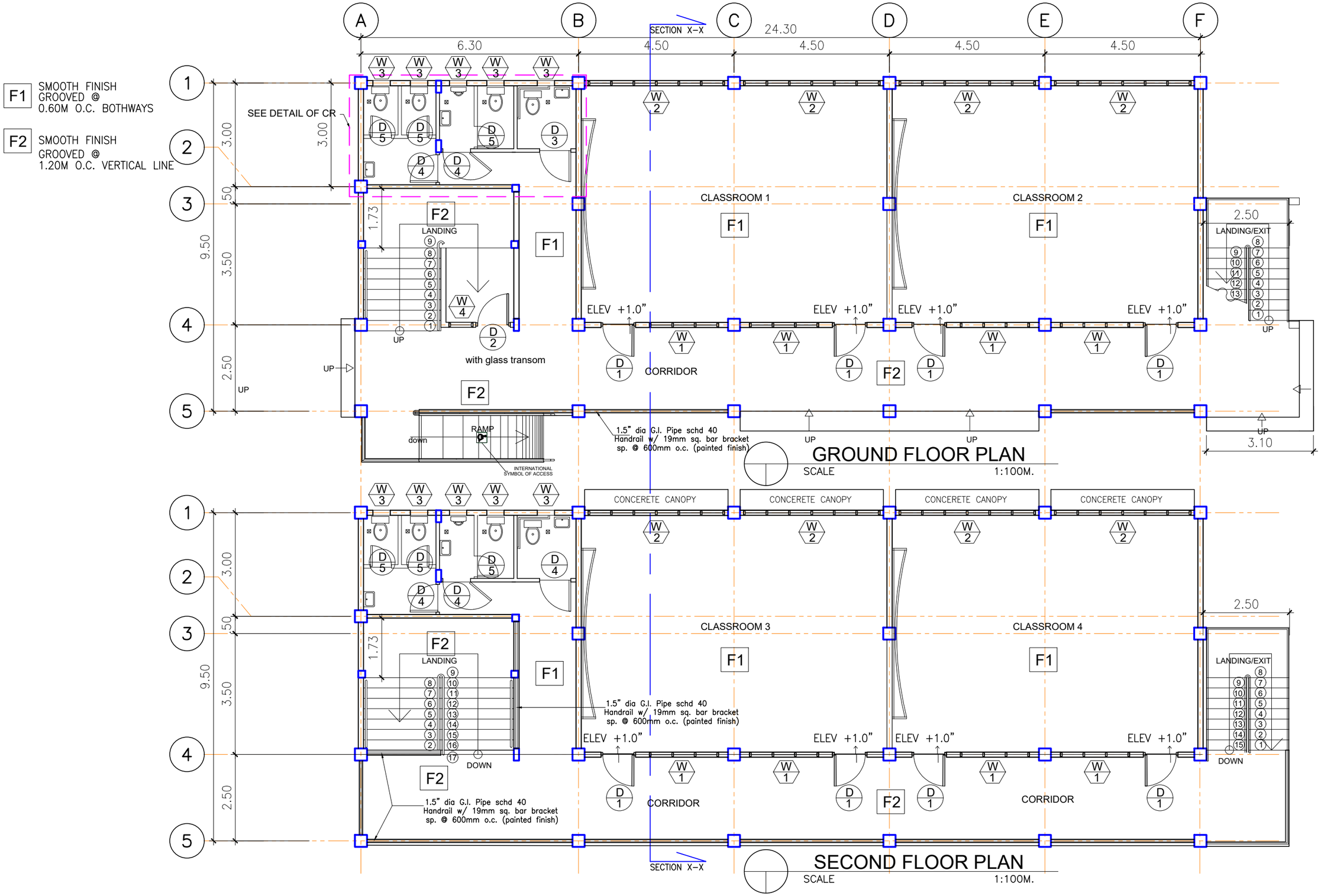

	PROJECT TITLE	PLANNING & DESIGN SECTION:	PROJECT ENGINEER	RECOMMENDING APPROVAL:	CONFORME:	APPROVED BY:		SPECIAL PROJECT TEAM/ PLANNING & DESIGN	SHEET NO.
REPUBLIC OF THE PHILIPPINES OFFICE OF THE CITY ENGINEER CITY OF NAGA	PROPOSED TWO (2) STOREY, FOUR (4)-CLASSROOM, SCHOOL BUILDING LOCATION: DEL ROSARIO HIGH SCHOOL, BRGY. DEL ROSARIO, NAGA CITY	JENIFFER P. TOLARBA ARCHITECT IV	JEMAEL S. TABINAS ENGINEER II	EMMEL M. ADAQUE ENGINEER III		ALEXANDER N. CANING ACTING CITY ENGINEER	NELSON S. LEGACION CITY MAYOR	EMMALYN M. GRECIA KIM R. REFUGIO	A3

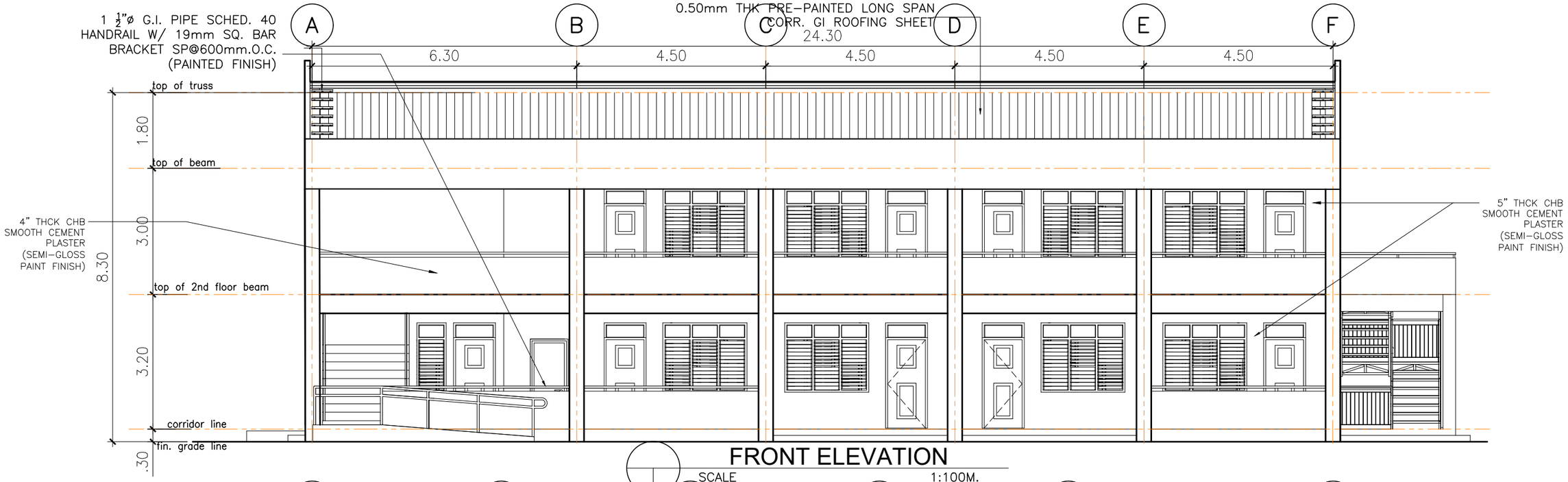

FRONT ELEVATION

SCALE 1:100M.

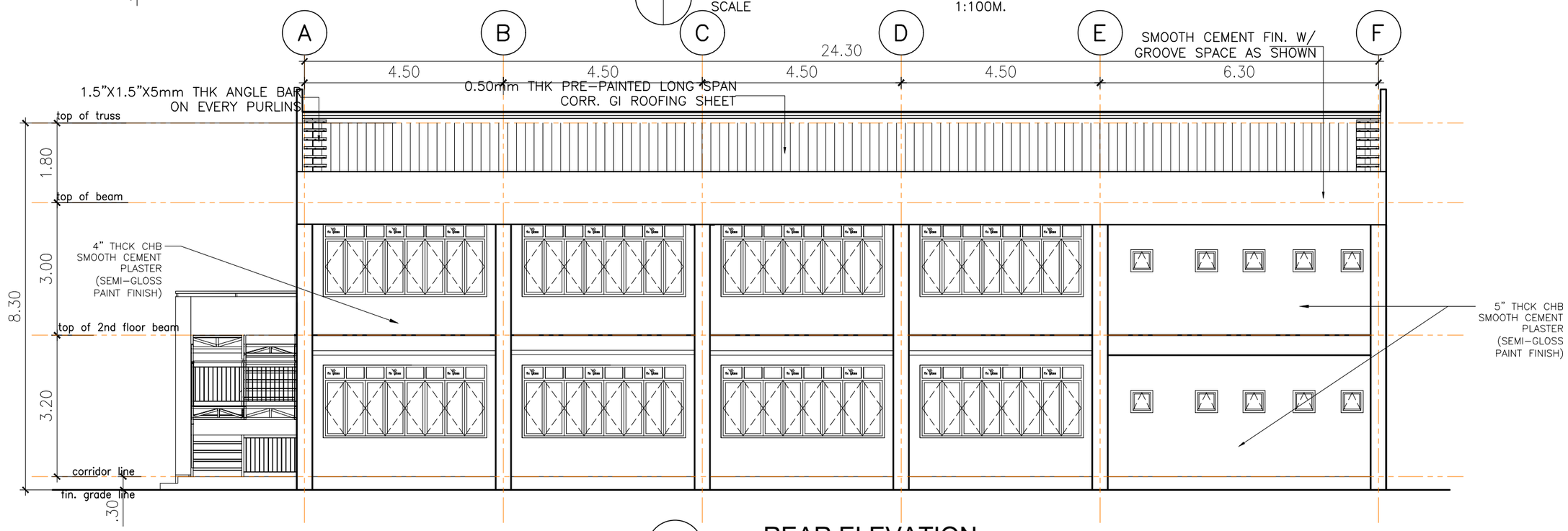

REAR ELEVATION

SCALE 1:100M.

	PROJECT TITLE	PLANNING & DESIGN SECTION:	PROJECT ENGINEER	RECOMMENDING APPROVAL:	CONFORME:	APPROVED BY:		SPECIAL PROJECT TEAM/ PLANNING & DESIGN	SHEET NO.
REPUBLIC OF THE PHILIPPINES OFFICE OF THE CITY ENGINEER CITY OF NAGA	PROPOSED TWO (2) STOREY, FOUR (4)-CLASSROOM, SCHOOL BUILDING LOCATION: DEL ROSARIO HIGH SCHOOL, BRGY. DEL ROSARIO, NAGA CITY	JENIFFER P. TOLARBA ARCHITECT IV	JEMAEL S. TABINAS ENGINEER II	EMMEL M. ADAQUE ENGINEER III		ALEXANDER N. CANING ACTING CITY ENGINEER	NELSON S. LEGACION CITY MAYOR	EMMALYN M. GRECIA KIM R. REFUGIO	A4

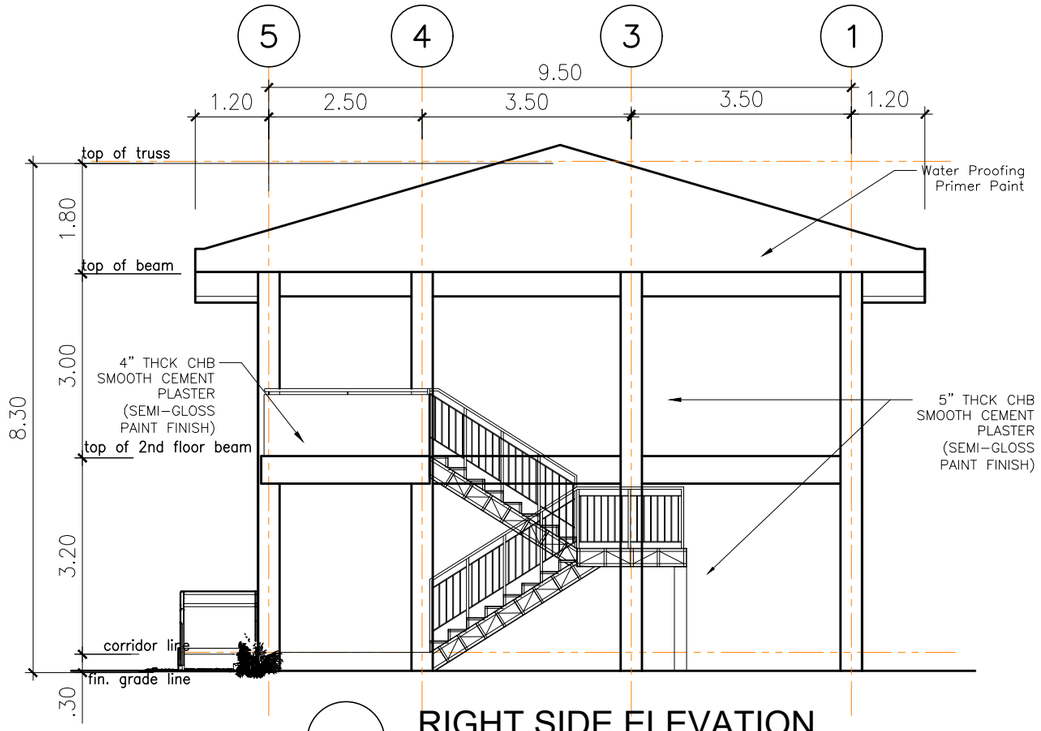

RIGHT SIDE ELEVATION

SCALE 1:100M.

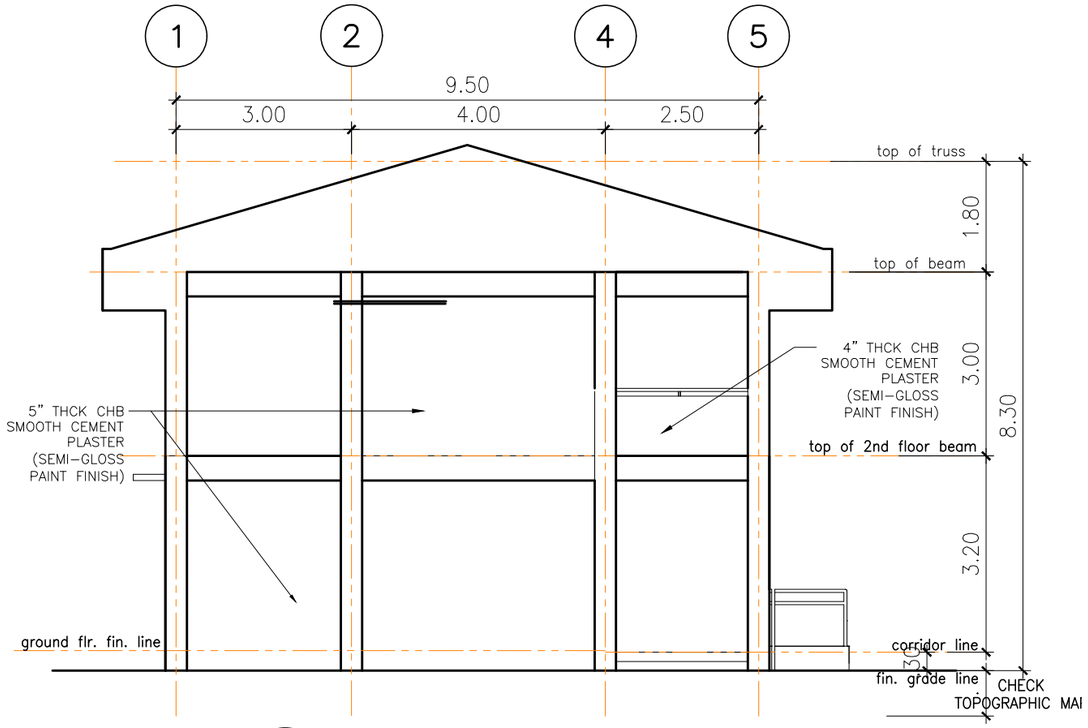

LEFT SIDE ELEVATION

SCALE 1:100M.

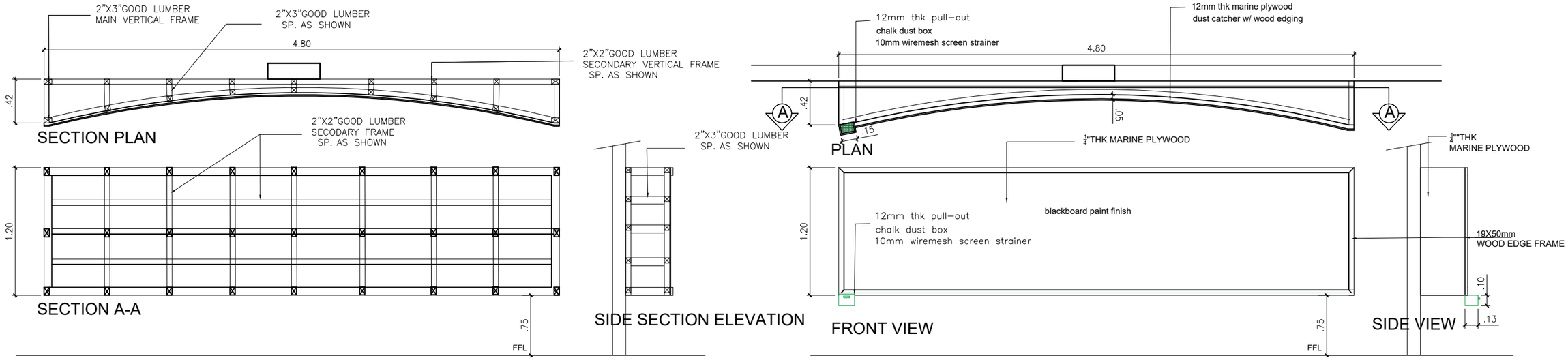

DETAIL OF BLACK BOARD

SCALE 1:40M

	PROJECT TITLE	PLANNING & DESIGN SECTION:	PROJECT ENGINEER	RECOMMENDING APPROVAL:	CONFORME:	APPROVED BY:		SPECIAL PROJECT TEAM/ PLANNING & DESIGN	SHEET NO.
REPUBLIC OF THE PHILIPPINES OFFICE OF THE CITY ENGINEER CITY OF NAGA	PROPOSED TWO (2) STOREY, FOUR (4)-CLASSROOM, SCHOOL BUILDING LOCATION: DEL ROSARIO HIGH SCHOOL, BRGY. DEL ROSARIO, NAGA CITY	JENIFFER P. TOLARBA ARCHITECT IV	JEMAEL S. TABINAS ENGINEER II	EMMEL M. ADAQUE ENGINEER III		ALEXANDER N. CANING ACTING CITY ENGINEER	NELSON S. LEGACION CITY MAYOR	EMMALYN M. GRECIA KIM R. REFUGIO	A5

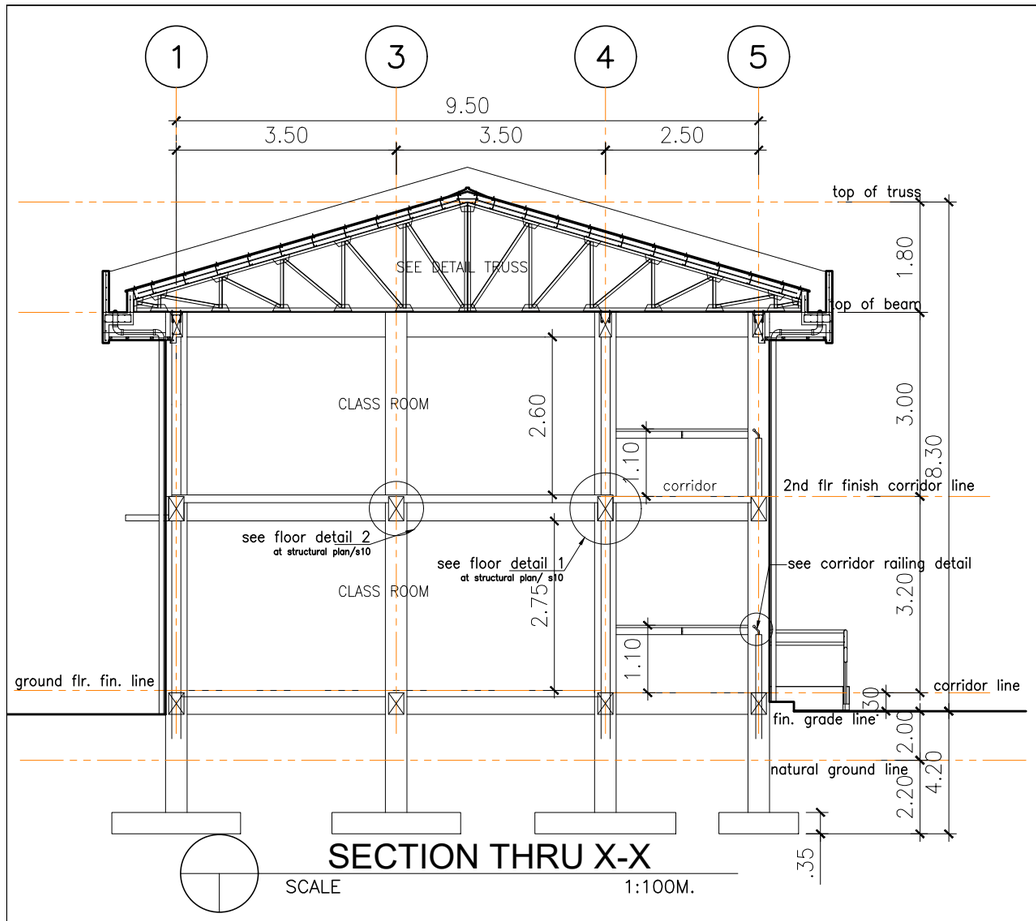

SECTION THRU X-X

SCALE 1:100M.

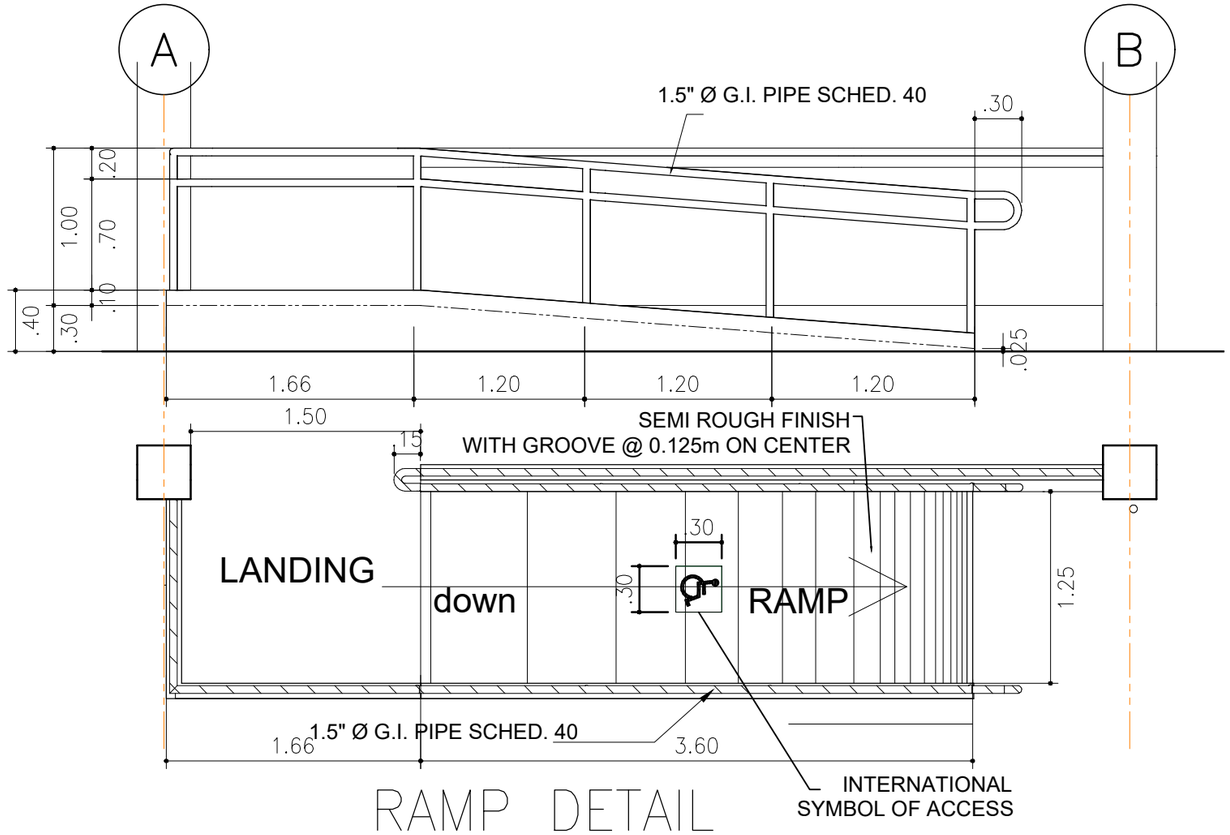

RAMP DETAIL

SCALE 1:40M.

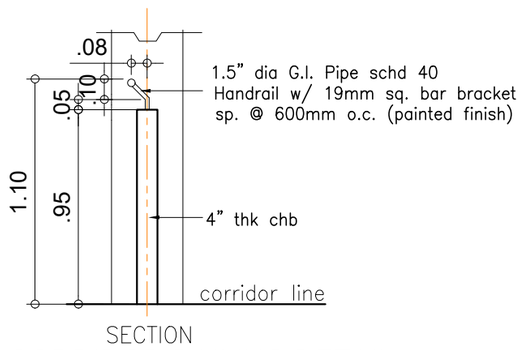

SECTION

CORRIDOR RAILING DETAIL

SCALE 1:30M

	PROJECT TITLE	PLANNING & DESIGN SECTION:	PROJECT ENGINEER	RECOMMENDING APPROVAL:	CONFORME:	APPROVED BY:		SPECIAL PROJECT TEAM/ PLANNING & DESIGN	SHEET NO.
REPUBLIC OF THE PHILIPPINES OFFICE OF THE CITY ENGINEER CITY OF NAGA	PROPOSED TWO (2) STOREY, FOUR (4)-CLASSROOM, SCHOOL BUILDING LOCATION: DEL ROSARIO HIGH SCHOOL, BRGY. DEL ROSARIO, NAGA CITY	JENIFFER P. TOLARBA ARCHITECT IV	JEMAEL S. TABINAS ENGINEER II	EMMEL M. ADAQUE ENGINEER III		ALEXANDER N. CANING ACTING CITY ENGINEER	NELSON S. LEGACION CITY MAYOR	EMMALYN M. GRECIA KIM R. REFUGIO	A6

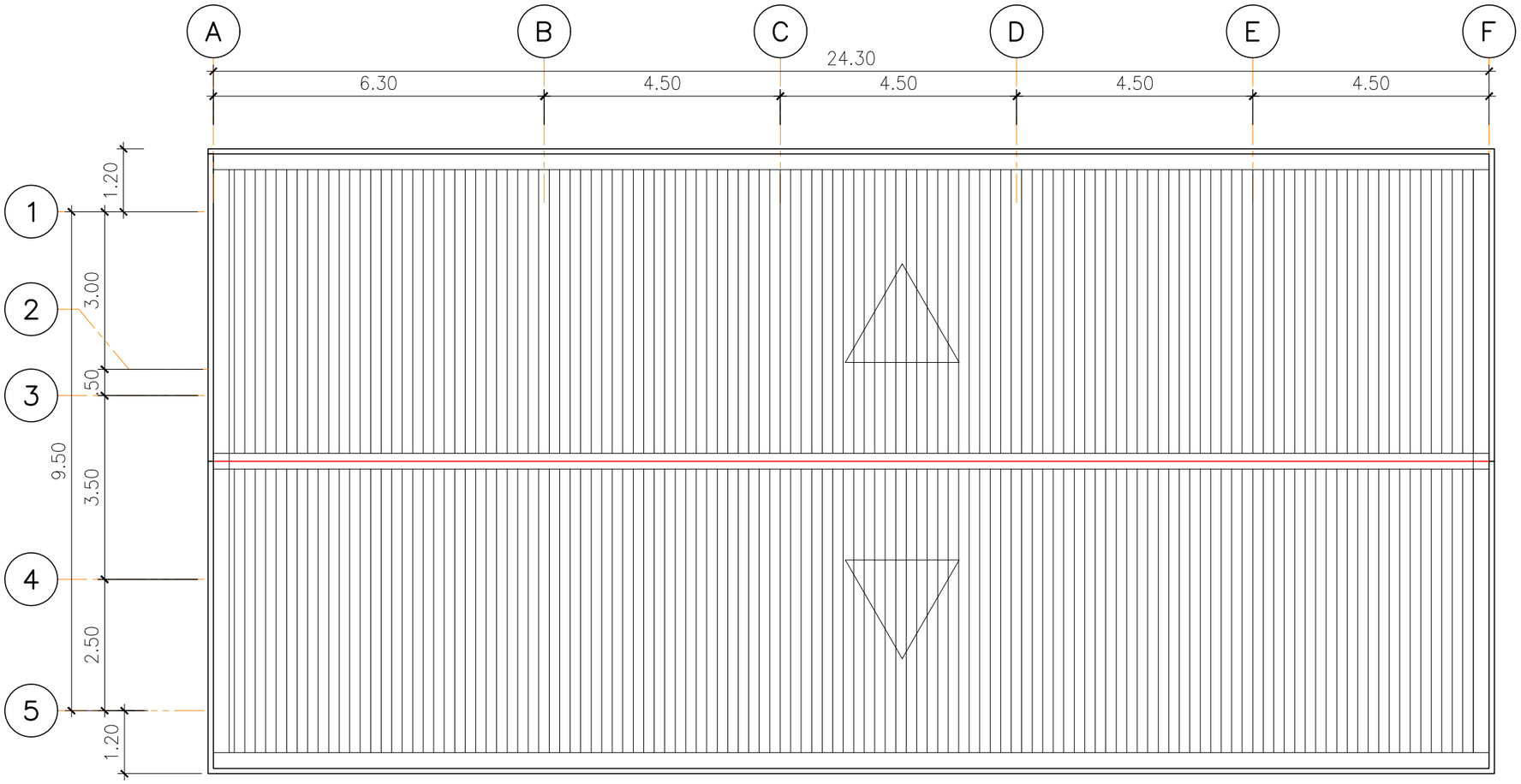

ROOF PLAN

SCALE 1:100M.

	PROJECT TITLE	PLANNING & DESIGN SECTION:	PROJECT ENGINEER	RECOMMENDING APPROVAL:	CONFORME:	APPROVED BY:		SPECIAL PROJECT TEAM/ PLANNING & DESIGN	SHEET NO.
REPUBLIC OF THE PHILIPPINES OFFICE OF THE CITY ENGINEER CITY OF NAGA	PROPOSED TWO (2) STOREY, FOUR (4)-CLASSROOM, SCHOOL BUILDING LOCATION: DEL ROSARIO HIGH SCHOOL, BRGY. DEL ROSARIO, NAGA CITY	JENIFFER P. TOLARBA ARCHITECT IV	JEMAEL S. TABINAS ENGINEER II	EMMEL M. ADAQUE ENGINEER III		ALEXANDER N. CANING ACTING CITY ENGINEER	NELSON S. LEGACION CITY MAYOR	EMMALYN M. GRECIA KIM R. REFUGIO	A7

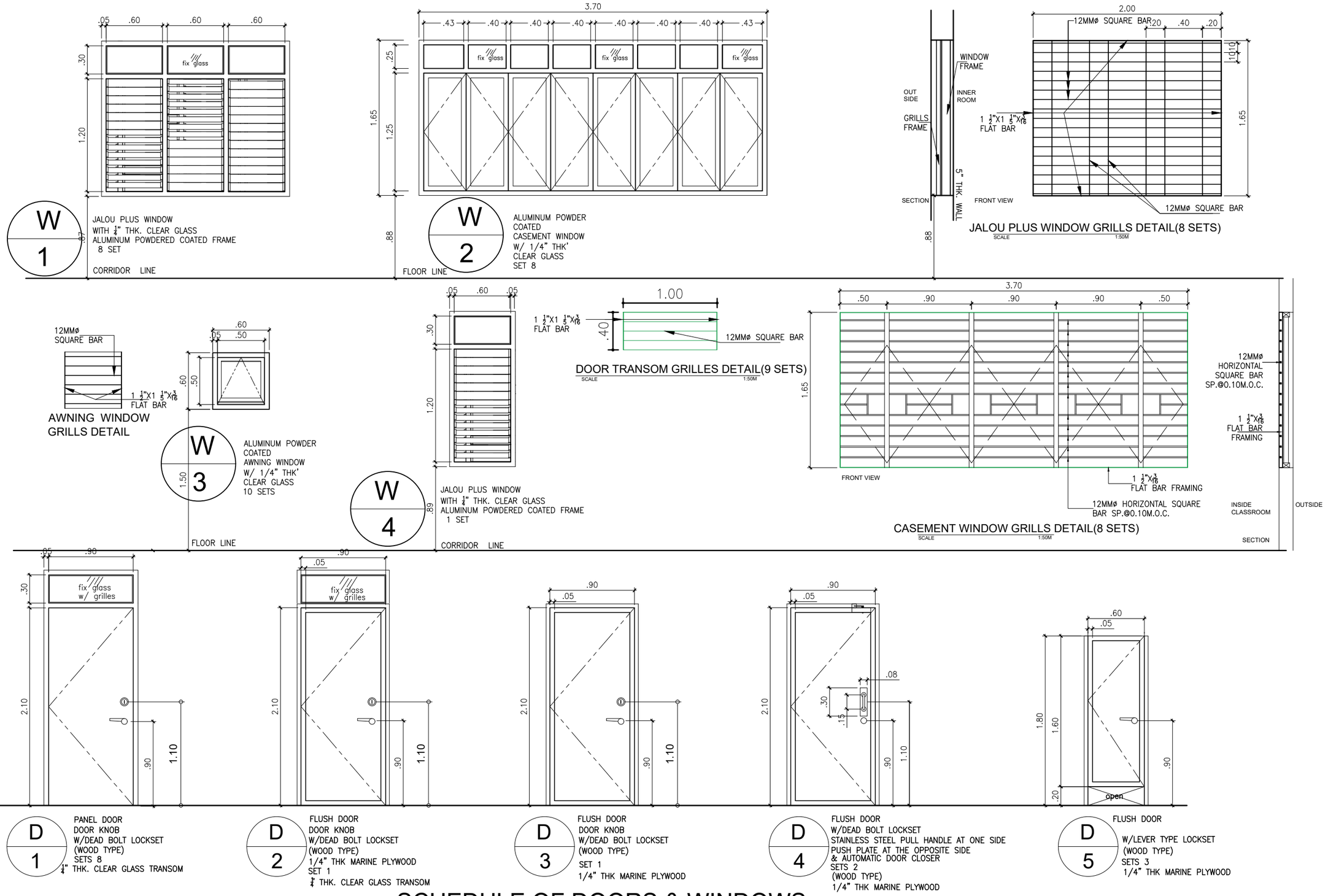

SCHEDULE OF DOORS & WINDOWS

SCALE 1:40M

	PROJECT TITLE	PLANNING & DESIGN SECTION:	PROJECT ENGINEER	RECOMMENDING APPROVAL:	CONFORME:	APPROVED BY:		SPECIAL PROJECT TEAM/ PLANNING & DESIGN	SHEET NO.
REPUBLIC OF THE PHILIPPINES OFFICE OF THE CITY ENGINEER CITY OF NAGA	PROPOSED TWO (2) STOREY, FOUR (4)-CLASSROOM, SCHOOL BUILDING LOCATION: DEL ROSARIO HIGH SCHOOL, BRGY. DEL ROSARIO, NAGA CITY	JENIFFER P. TOLARBA ARCHITECT IV	JEMAEL S. TABINAS ENGINEER II	EMMEL M. ADAQUE ENGINEER III		ALEXANDER N. CANING ACTING CITY ENGINEER	NELSON S. LEGACION CITY MAYOR	EMMALYN M. GRECIA KIM R. REFUGIO	A8

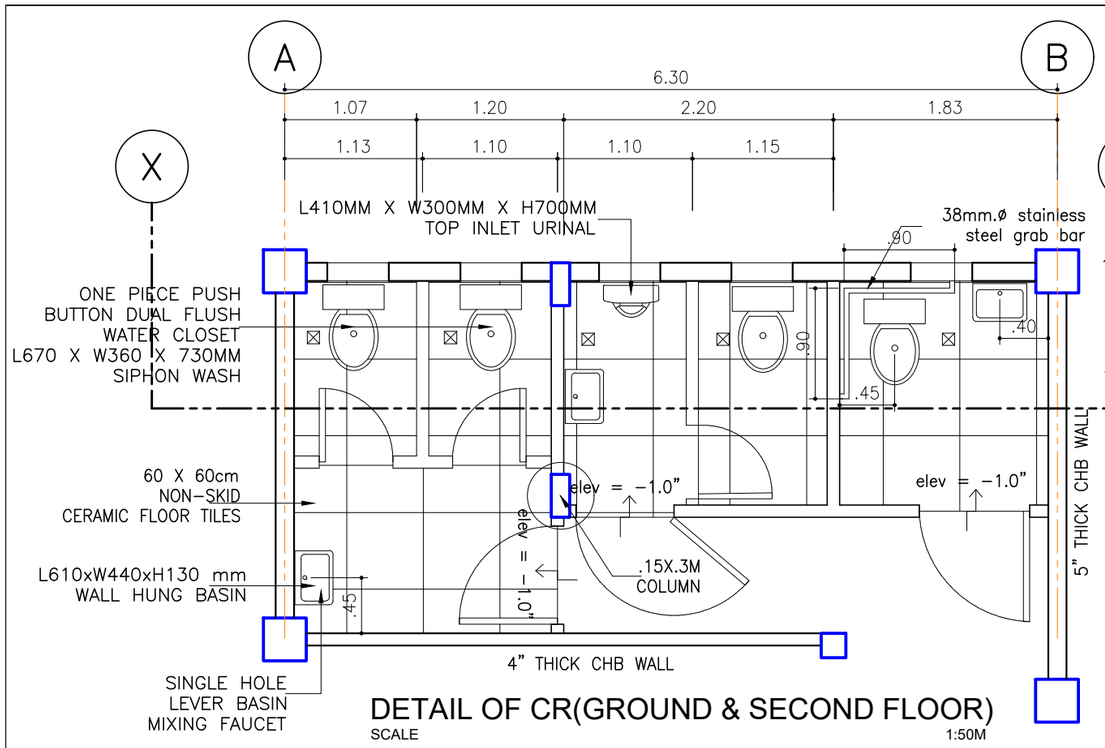

DETAIL OF CR(GROUND & SECOND FLOOR)

SCALE 1:50M

NOTE:

1. HEIGHT OF WATER MAXIMUM 0.45M CLOSETS SHOULD BE FLUSH CONTROL SHOULD HAVE A 1.20M; MAXIMUM HEIGHT OF
2. HEIGHT OF LAVATORIES MAXIMUM WITH A KNEE 0.80M SHOULD BE 0.60M–0.70M RECESS OF VERTICAL CLEARANCE AND A DEPTH; 0.50M
3. URINALS SHOULD HAVE AN MAXIMUM ELONGATED LIP, THE HEIGHT OF THE LIP SHOULD BE 0.48M.

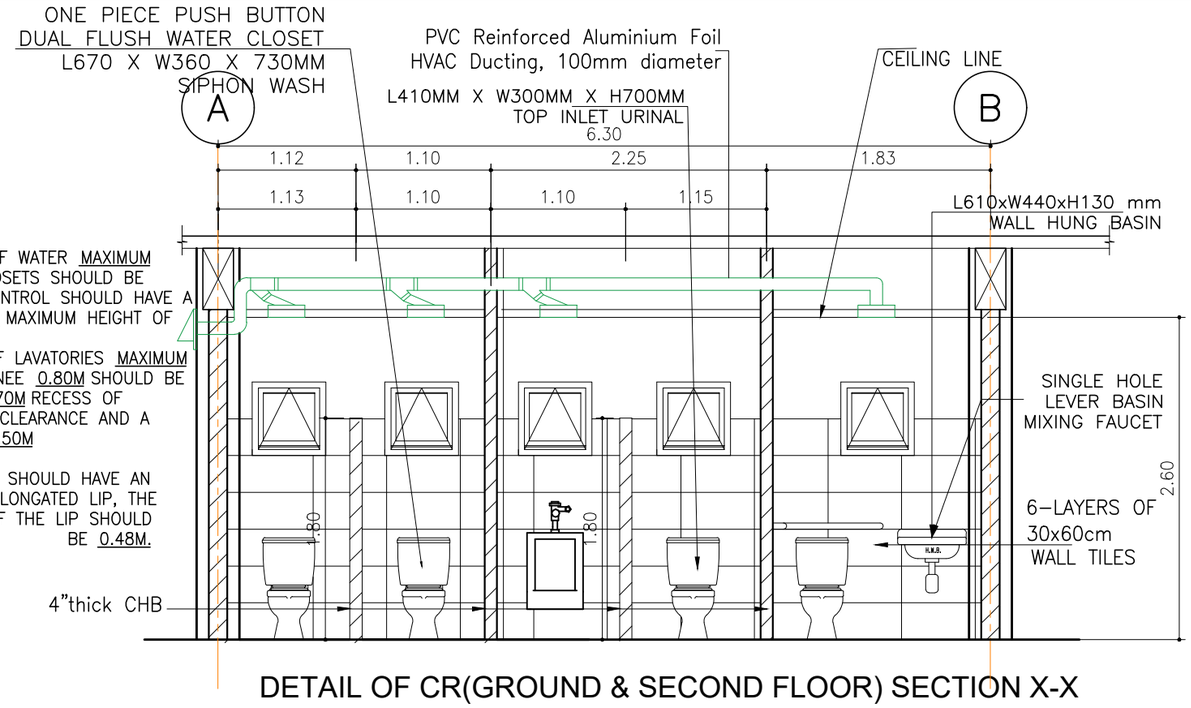

DETAIL OF CR(GROUND & SECOND FLOOR) SECTION X-X

SCALE 1:50M

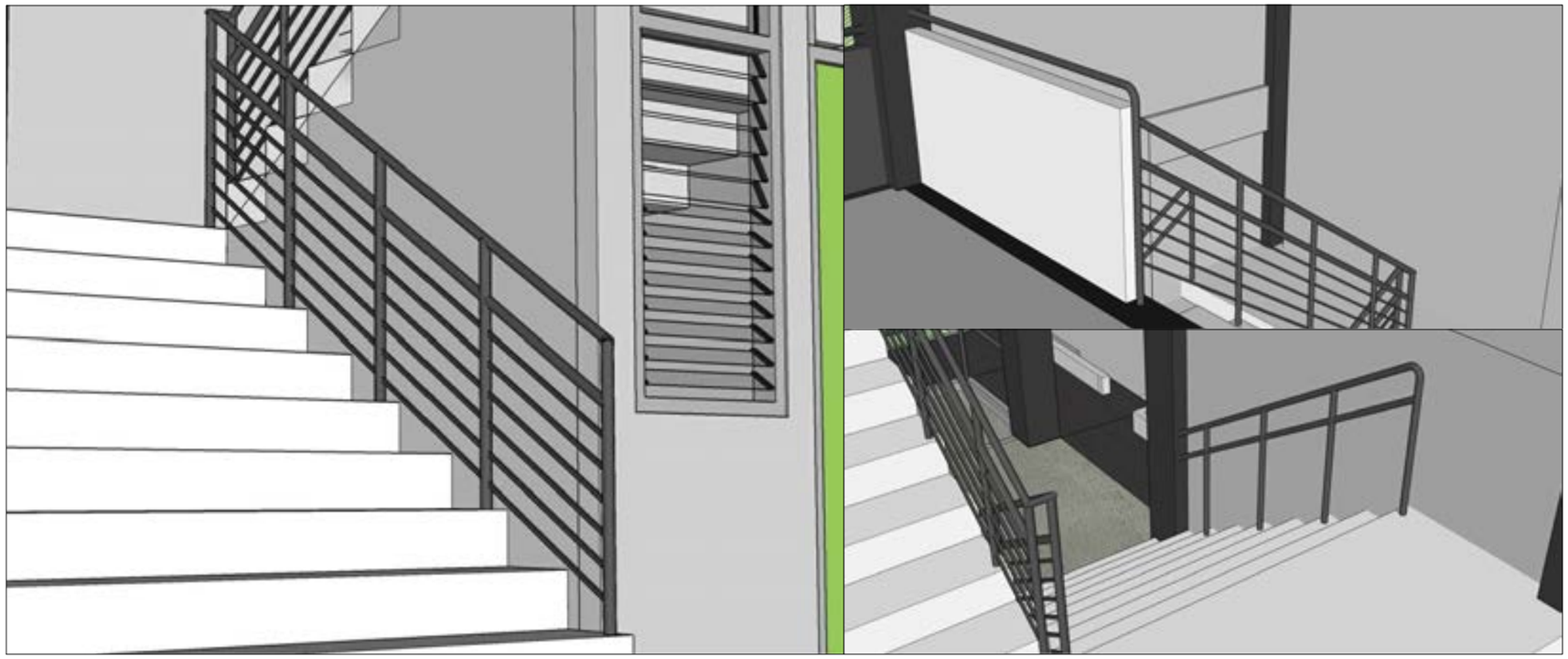

STEEL RAILING

	PROJECT TITLE	PLANNING & DESIGN SECTION:	PROJECT ENGINEER	RECOMMENDING APPROVAL:	CONFORME:	APPROVED BY:		SPECIAL PROJECT TEAM/ PLANNING & DESIGN	SHEET NO.
REPUBLIC OF THE PHILIPPINES OFFICE OF THE CITY ENGINEER CITY OF NAGA	PROPOSED TWO (2) STOREY, FOUR (4)-CLASSROOM, SCHOOL BUILDING LOCATION: DEL ROSARIO HIGH SCHOOL, BRGY. DEL ROSARIO, NAGA CITY	JENIFFER P. TOLARBA ARCHITECT IV	JEMAEL S. TABINAS ENGINEER II	EMMEL M. ADAQUE ENGINEER III		ALEXANDER N. CANING ACTING CITY ENGINEER	NELSON S. LEGACION CITY MAYOR	EMMALYN M. GRECIA KIM R. REFUGIO	A9

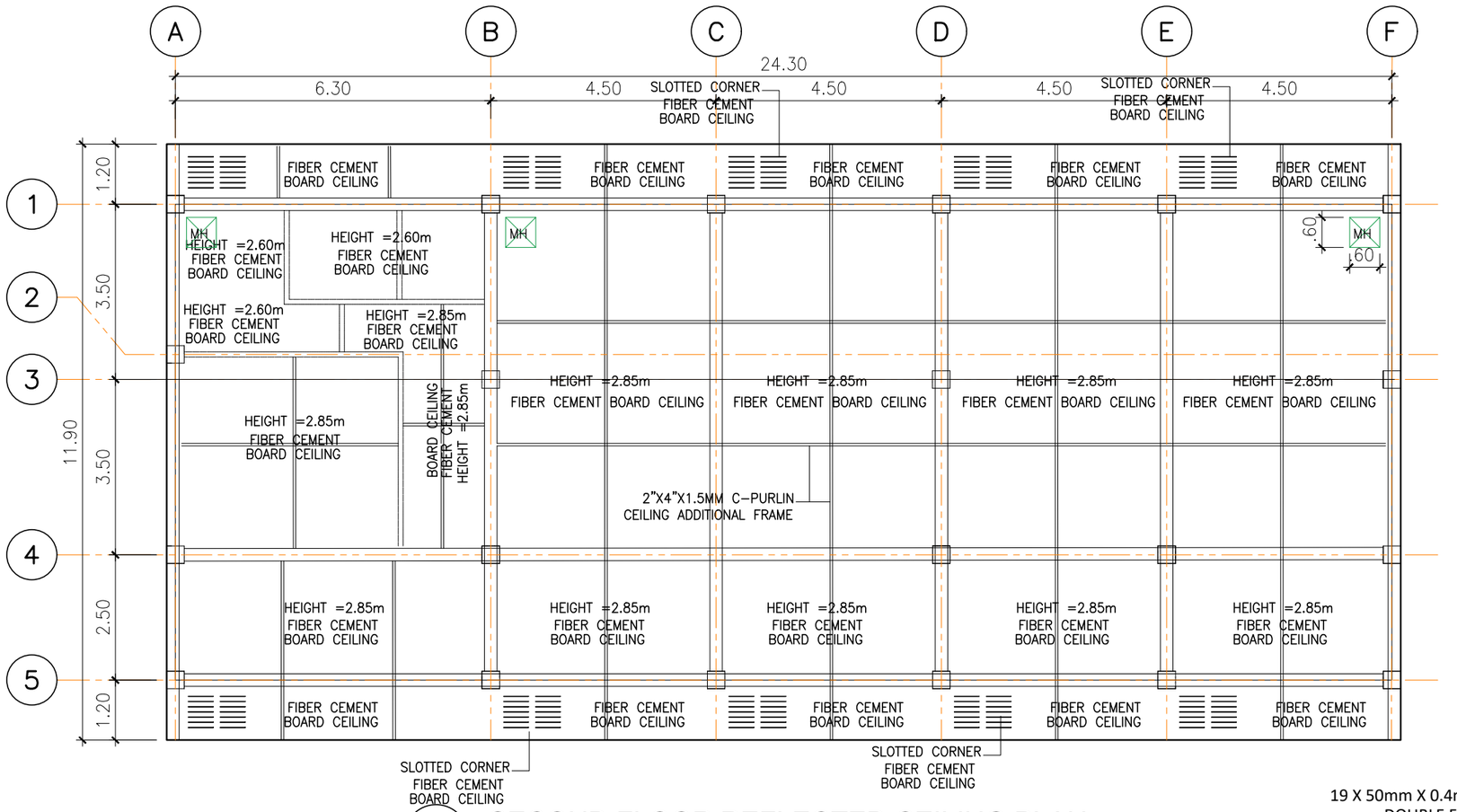

SECOND FLOOR REFLECTED CEILING PLAN

SCALE 1:100M.

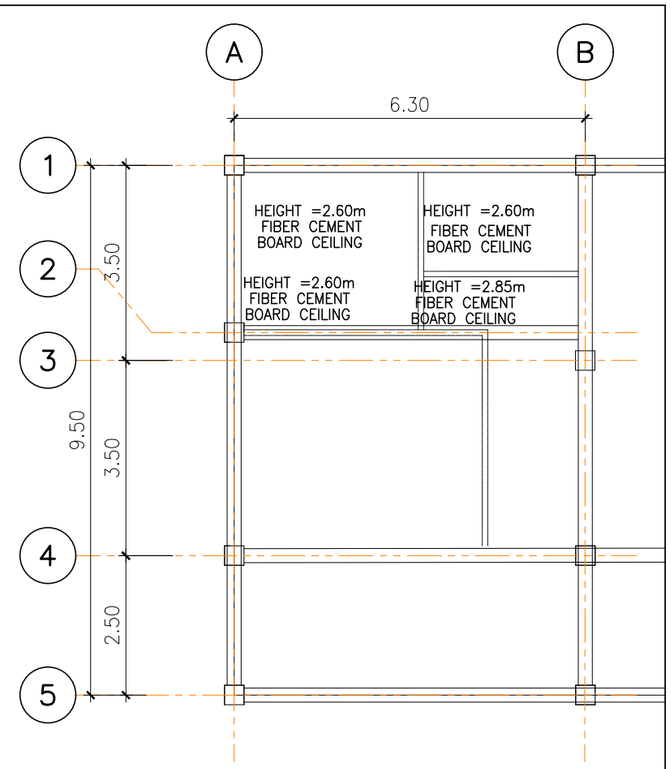

GROUND FLOOR REFLECTED CEILING PLAN

SCALE 1:100M.

INSTALLATION:

1. WALL ANGLE
   - Fasten the wall angle to the wall maintaining the perimeter using concrete nail/Rivet for concrete surface or woods for wood surfaces spaced at 200 mm interval
2. DOUBLE FURRING
   - Attach the furring to the wall angle parallel to the longer side of the ceiling perimeter at 0.40m spacing on center using blind rivets.
3. CARRYING CHANNEL
   - Connect the carrying channel perpendicular to the double furring at 1.20m spacing on center using w-clip.
4. HANGER
   - Spaced @ 0.80 m O.C. Fixed on Purlins, Rafter, Trusses.
5. C-PURLIN STIFFENER
   - 2"X4"X1.5MM @ Midspan of every carrying channel. Bolted on the beam by 12mm dia bolts connected perpendicular on the top flange of the carrying channel (SEE REFLECTED CEILING PLAN)

*HARDWARE
1.)W-Clip
2.)Blind Rivet
3.)Concrete Nail #1

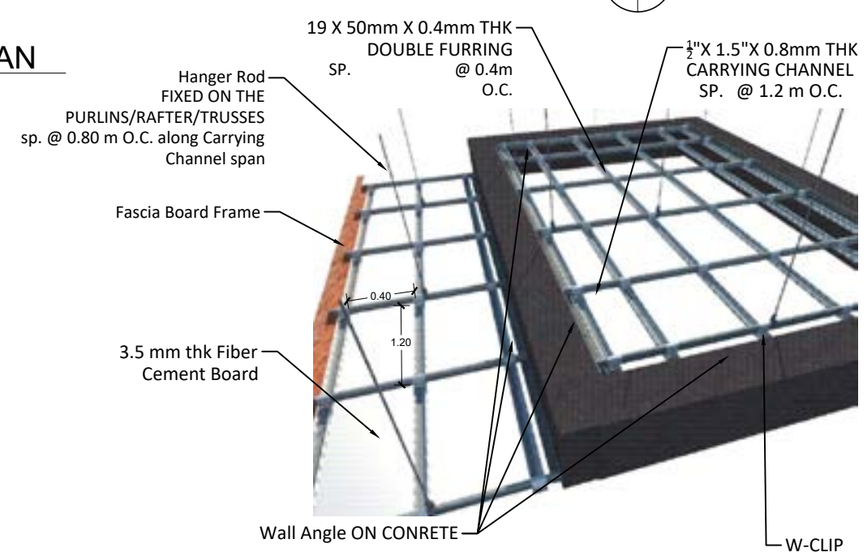

CEILING FRAMING DETAIL

SCALE 1:40

	PROJECT TITLE	PLANNING & DESIGN SECTION:	PROJECT ENGINEER	RECOMMENDING APPROVAL:	CONFORME:	APPROVED BY:		SPECIAL PROJECT TEAM/ PLANNING & DESIGN	SHEET NO.
REPUBLIC OF THE PHILIPPINES OFFICE OF THE CITY ENGINEER CITY OF NAGA	PROPOSED TWO (2) STOREY, FOUR (4)-CLASSROOM, SCHOOL BUILDING LOCATION: DEL ROSARIO HIGH SCHOOL, BRGY. DEL ROSARIO, NAGA CITY	JENIFFER P. TOLARBA ARCHITECT IV	JEMAEL S. TABINAS ENGINEER II	EMMEL M. ADAQUE ENGINEER III		ALEXANDER N. CANING ACTING CITY ENGINEER	NELSON S. LEGACION CITY MAYOR	EMMALYN M. GRECIA KIM R. REFUGIO	A10

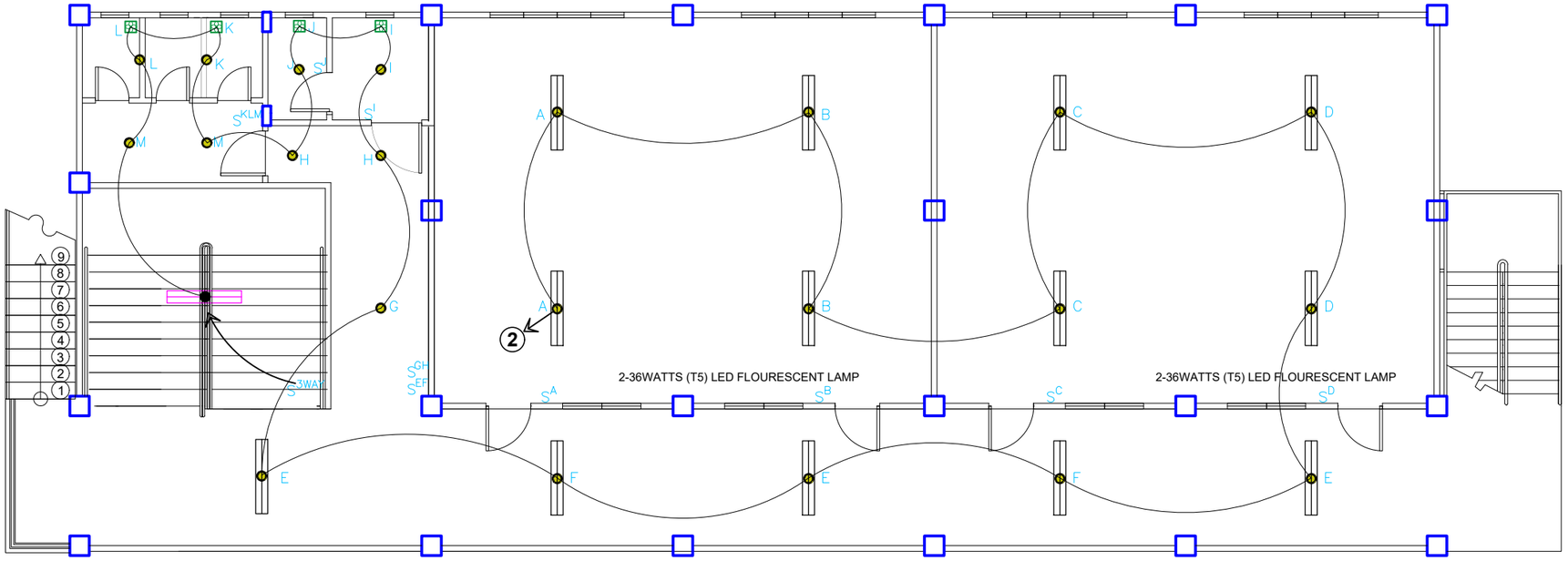

SECOND FLOOR LIGHTING OUTLET LAYOUT

SCALE 1:100M.

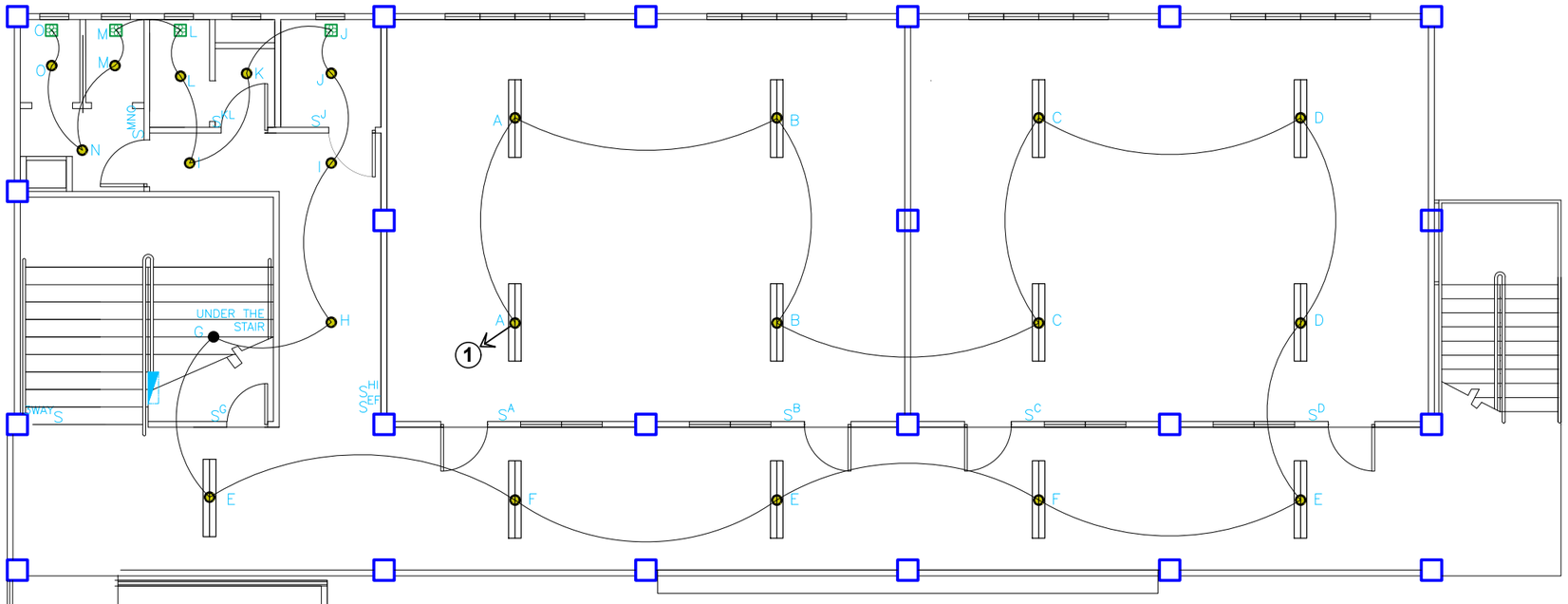

GROUND FLOOR LIGHTING OUTLET LAYOUT

SCALE 1:100M.

	PROJECT TITLE:	PROJECT ENGINEER:	CERTIFIED BY:	CONCURRED BY:	APPROVED BY:		SPECIAL PROJECT TEAM/ PLANNING & DESIGN	SHEET NO.
REPUBLIC OF THE PHILIPPINES OFFICE OF THE CITY ENGINEER CITY OF NAGA	PROPOSED TWO (2) STOREY, FOUR (4)-CLASSROOM, SCHOOL BUILDING	BRET OWEN S. TALAGTAG ENGINEER I	GREGORY DL. MORENO ENGINEER III		ALEXANDER N. CANING ACTING CITY ENGINEER	NELSON S. LEGACION CITY MAYOR	EMMALYN M. GRECIA KIM R. REFUGIO	E1 E4
	LOCATION: DEL ROSARIO HIGH SCHOOL, BRGY. DEL ROSARIO, NAGA CITY							

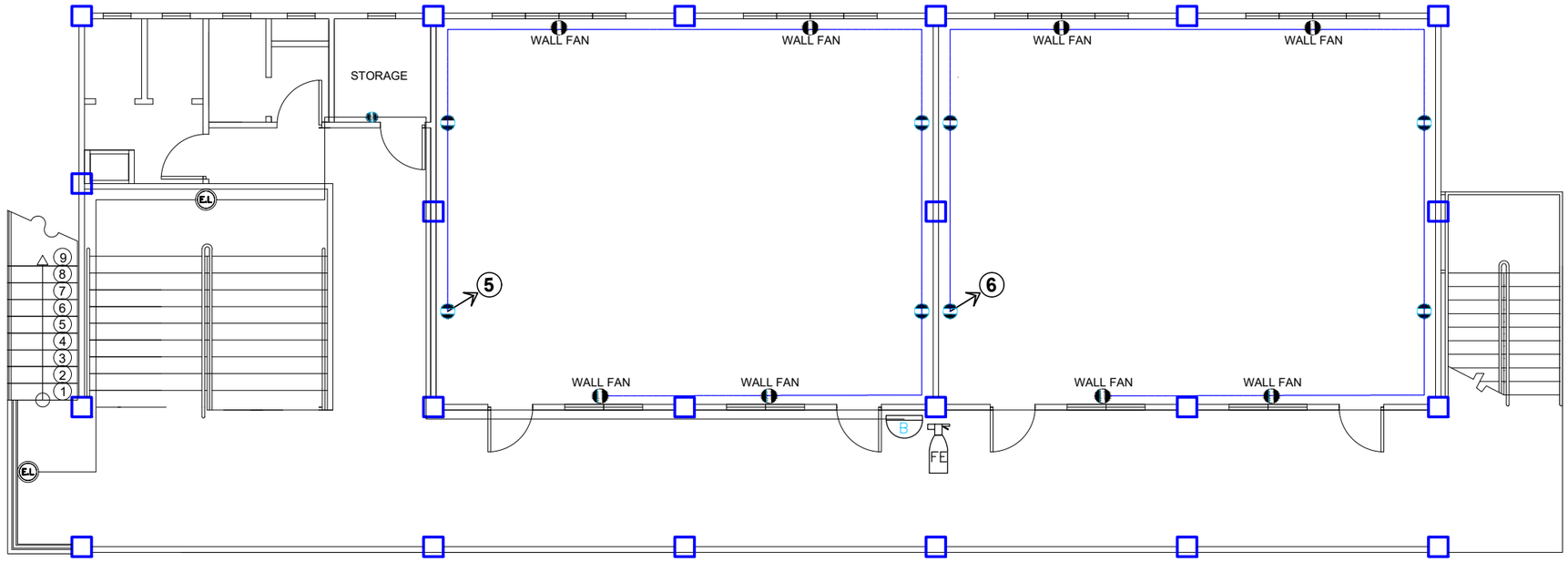

SECOND FLOOR CONVENIENCE OUTLET LAYOUT

SCALE 1:100M.

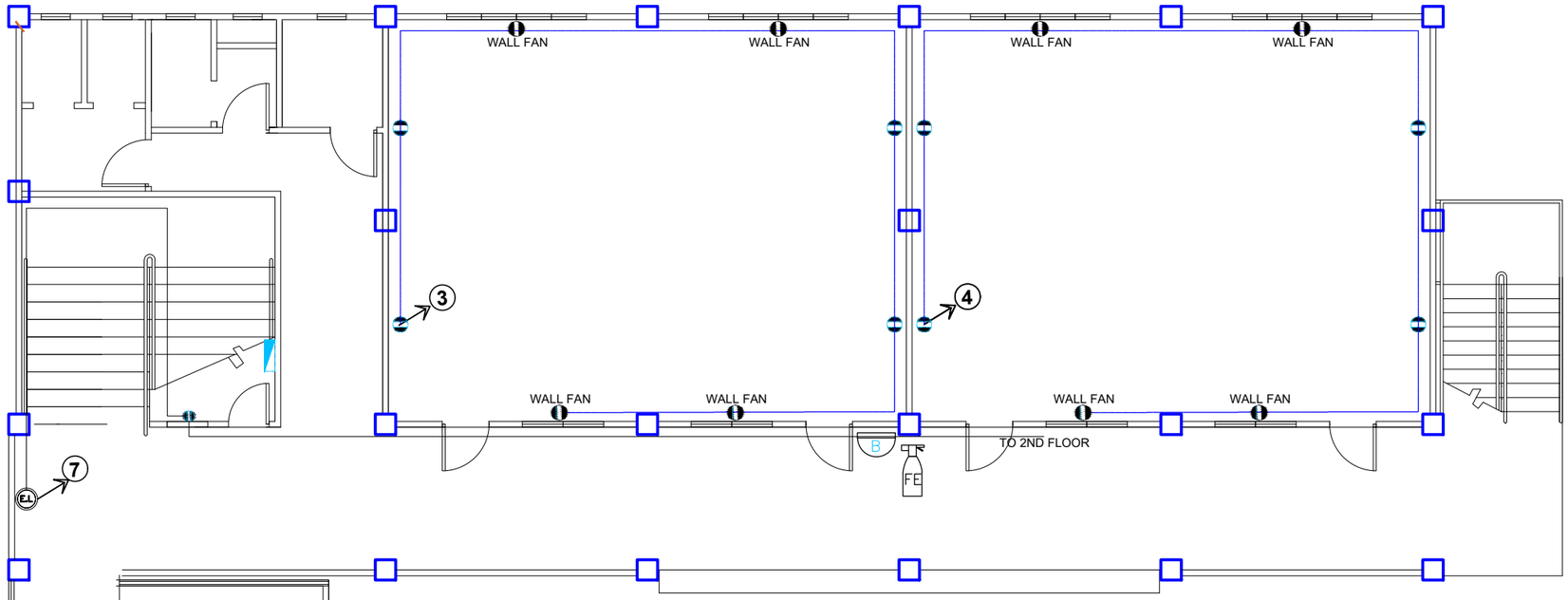

GROUND FLOOR CONVENIENCE OUTLET LAYOUT

SCALE 1:100M.

	PROJECT TITLE:	PROJECT ENGINEER:	CERTIFIED BY:	CONCURRED BY:	APPROVED BY:		SPECIAL PROJECT TEAM/ PLANNING & DESIGN	SHEET NO.
REPUBLIC OF THE PHILIPPINES OFFICE OF THE CITY ENGINEER CITY OF NAGA	PROPOSED TWO (2) STOREY, FOUR (4)-CLASSROOM, SCHOOL BUILDING	BRET OWEN S. TALAGTAG ENGINEER I	GREGORY DL. MORENO ENGINEER III		ALEXANDER N. CANING ACTING CITY ENGINEER	NELSON S. LEGACION CITY MAYOR	EMMALYN M. GRECIA KIM R. REFUGIO	E2 E4
	LOCATION: DEL ROSARIO HIGH SCHOOL, BRGY. DEL ROSARIO, NAGA CITY							

SCHEDULE OF LOAD:

CKT. NO.	LOAD DESCRIPTION	NO.OF			SWITCHES				AMP.				V	VA	CB	SIZE OF WIRE	
		LO	CO	OTHRES	S1	S2	S3	S3W	AB	BC	CA	AMP.				WIRE	CONDUIT
1	2-18W (T5) FLOU. LAMP(INDUSTRIAL TYPE) LED BULB 9 WATTS EXHAUST FAN	14sets 9		 4	6	3	1	1				3.41	230	785	15,2P	2C-2.0MM2 THHN/THWN WIRE 1C-2.0MM2 THHN/THWN WIRE	20MMø UPVC PIPE
2	2-18W (T5) FLOU. LAMP(INDUSTRIAL TYPE) LED BULB 9 WATTS EXHAUST FAN	13sets 10		 4	6	2	1	1				3.25	230	749	15,2P	2C-2.0MM2 THHN/THWN WIRE 1C-2.0MM2 THHN/THWN WIRE	20MMø UPVC PIPE
3	DUPLEX CONV. OUTLET WALL FAN OUTLET		4 4									6.26	230	1440	20,2P	2C-3.5MM2 THHN/THWN WIRE 1C-3.5MM2 THHN/THWN WIRE	20MMø UPVC PIPE
4	DUPLEX CONV. OUTLET WALL FAN OUTLET		4 4									6.26	230	1440	20,2P	2C-3.5MM2 THHN/THWN WIRE 1C-3.5MM2 THHN/THWN WIRE	20MMø UPVC PIPE
5	DUPLEX CONV. OUTLET WALL FAN OUTLET		4 4									6.26	230	1440	20,2P	2C-3.5MM2 THHN/THWN WIRE 1C-3.5MM2 THHN/THWN WIRE	20MMø UPVC PIPE
6	DUPLEX CONV. OUTLET WALL FAN OUTLET		4 4									6.26	230	1440	20,2P	2C-3.5MM2 THHN/THWN WIRE 1C-3.5MM2 THHN/THWN WIRE	20MMø UPVC PIPE
7	EMERGENCY LIGHT DUPLEX CONV. OUTLET FIRE ALARM		3 2	 2								6.26	230	1440	20,2P	2C-3.5MM2 THHN/THWN WIRE 1C-3.5MM2 THHN/THWN WIRE	20MMø UPVC PIPE
8	S P A R E											6.52	230	1,500			
9	S P A R E											6.52	230	1,500			
10	S P A R E											6.52	230	1,500			
	T O T A L	73	37	10	12	5	2	2				57.52	230	13,234	100,2P	2C-30.0MM2 THHN/THWN WIRE-2 1C-14.0MM2 THHN/THWN WIRE	40MMø RSC PIPE

A.COMPUTATION OF SERVICE CONDUCTOR

$$IT = \frac{13{,}234\ VA}{230\ V} \times 100\ \%\ DF = 57.53\ AMP.$$

B. FOR MAIN CIRCUIT PROTECTION

USE : 100,2P MCB
230 V, 60 HZ

	PROJECT TITLE:	PROJECT ENGINEER:	CERTIFIED BY:	CONCURRED BY:	APPROVED BY:		SPECIAL PROJECT TEAM/ PLANNING & DESIGN	SHEET NO.
REPUBLIC OF THE PHILIPPINES OFFICE OF THE CITY ENGINEER CITY OF NAGA	PROPOSED TWO (2) STOREY, FOUR (4)-CLASSROOM, SCHOOL BUILDING LOCATION: DEL ROSARIO HIGH SCHOOL, BRGY. DEL ROSARIO, NAGA CITY	BRET OWEN S. TALAGTAG ENGINEER I	GREGORY DL. MORENO ENGINEER III		ALEXANDER N. CANING ACTING CITY ENGINEER	NELSON S. LEGACION CITY MAYOR	EMMALYN M. GRECIA KIM R. REFUGIO	E3 E4

SPECIFICATION:

1. ALL INSTALLATION SHALL BE IN COMPLIANCE TO P.E.C AND LOCAL ORDINANCES.
2. ALL INTERIOR CONDUITS SHALL BE PNS 14.
3. ALL CONDUITS ENTERING JUNCTION BOXES, PULL BOXES, AUXILLIARY GUTTER, PANEL BOARDS AND OTHER METAL BOXES SHALL BE TERMINATED IN APPROVED TYPE ADAPTORS.
4. ALL LIGHTING FIXTURES SHALL BE GROUNDED AS REQUIRED BY ARTICLE 4.10 OF P.E.C. USE ADDITIONAL INSULATORS FOR TERMINATION AS NECESSARY.
5. ALL JUNCTION AND UTILITY BOXES SHALL BE METAL GAUGE 16, HOT DIP GALVANIZED.
6. CLEARANCES OF TERMINAL FROM ALL METAL PARTS SHALL BE OBTAINED.
7. BENDING RADIUS OF CONDUCTOR SHALL BE COMPLIANT TO P.E.C
8. DERATING OF CONDUCTOR SHALL BE APPLIED FOR MORE THAN FOUR (4) CONDUCTORS IN CONDUITS OR WIRE WAYS.
9. ALL INSTALLATIONS SHALL BE UNDER SUPERVISION OF LICENSE ELECTRICAL PRACTITIONERS.
10. PANEL BOXES AND AUXILLIARY GUTTERS SHALL BE MADE OF 1.5mm G.I POWDER COATED OR ENAMEL FINISHED OVER APPROVED METAL PRIMER.
11. ALL GROUNDING CONDUCTOR, GROUNDING ROD, SHALL BE BONDED TOGETHER.

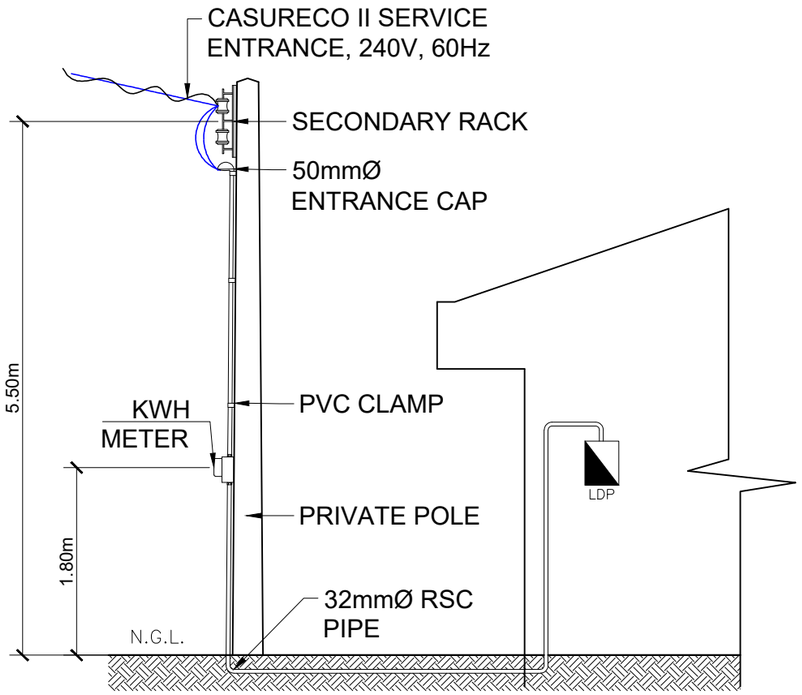

SERVICE ENTRANCE DETAIL

SCALE NTS

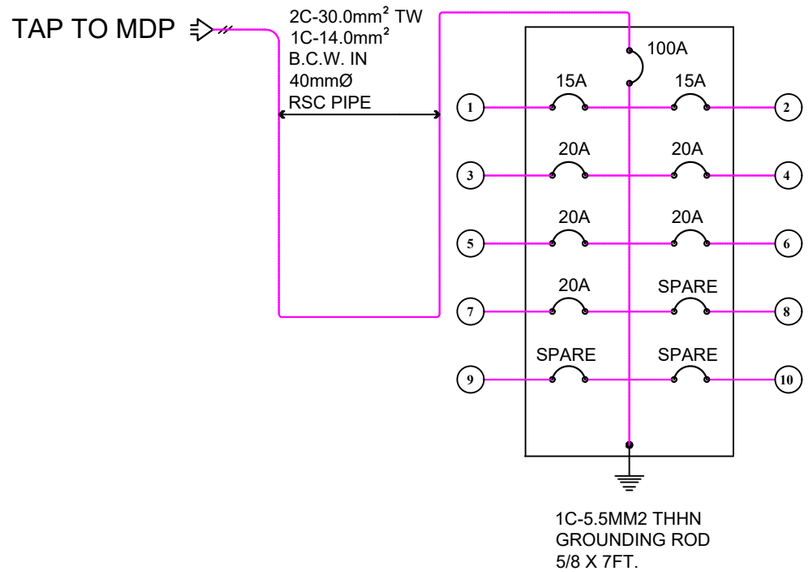

SINGLE LINE DIAGRAM

SCALE NTS

LEGEND:

	LIGHTING OUTLET, PINLIGHT
	LIGHTING OUTLET, CIRCULAR LAMP
S^{a}	ONE GANG SWITCH
S^{ab}	TWO GANG SWITCH
S^{abc}	THREE GRANG SWITCH
S^{3w}	THREE WAY SWITCH
	DUPLEX CONVENIENCE OUTLET
WP	WEATHER PROOF C.O.
	SERVICE ENTRANCE
	2–36WATTS (T5) FLOURESCENT LAMP
WF	WALL FAN
CF	CEILING FAN
REF	REFRIGERATOR OUTLET
R	RANGE OUTLET
ACU	ACU OUTLET
	SWITCH LEG
3	CIRCUIT HOMERUN
	POWER PANEL
M	KWH METER
20 AT	CIRCUIT BREAKER WITH RATING
	GROUND
B	MANUAL EMERGENCY ALARM
EMERGENCY LIGHT	EMERGENCY LIGHT
FE	FIRE EXTINGUISHER (10 LBS)

REPUBLIC OF THE PHILIPPINES
OFFICE OF THE CITY ENGINEER
CITY OF NAGA

PROJECT TITLE:	PROJECT ENGINEER:	CERTIFIED BY:	CONCURRED BY:	APPROVED BY:		SPECIAL PROJECT TEAM/ PLANNING & DESIGN	SHEET NO.
PROPOSED TWO (2) STOREY, FOUR (4)-CLASSROOM, SCHOOL BUILDING	BRET OWEN S. TALAGTAG ENGINEER I	GREGORY DL. MORENO ENGINEER III		ALEXANDER N. CANING ACTING CITY ENGINEER	NELSON S. LEGACION CITY MAYOR	EMMALYN M. GRECIA KIM R. REFUGIO	E4 E4
LOCATION: DEL ROSARIO HIGH SCHOOL, BRGY. DEL ROSARIO, NAGA CITY							

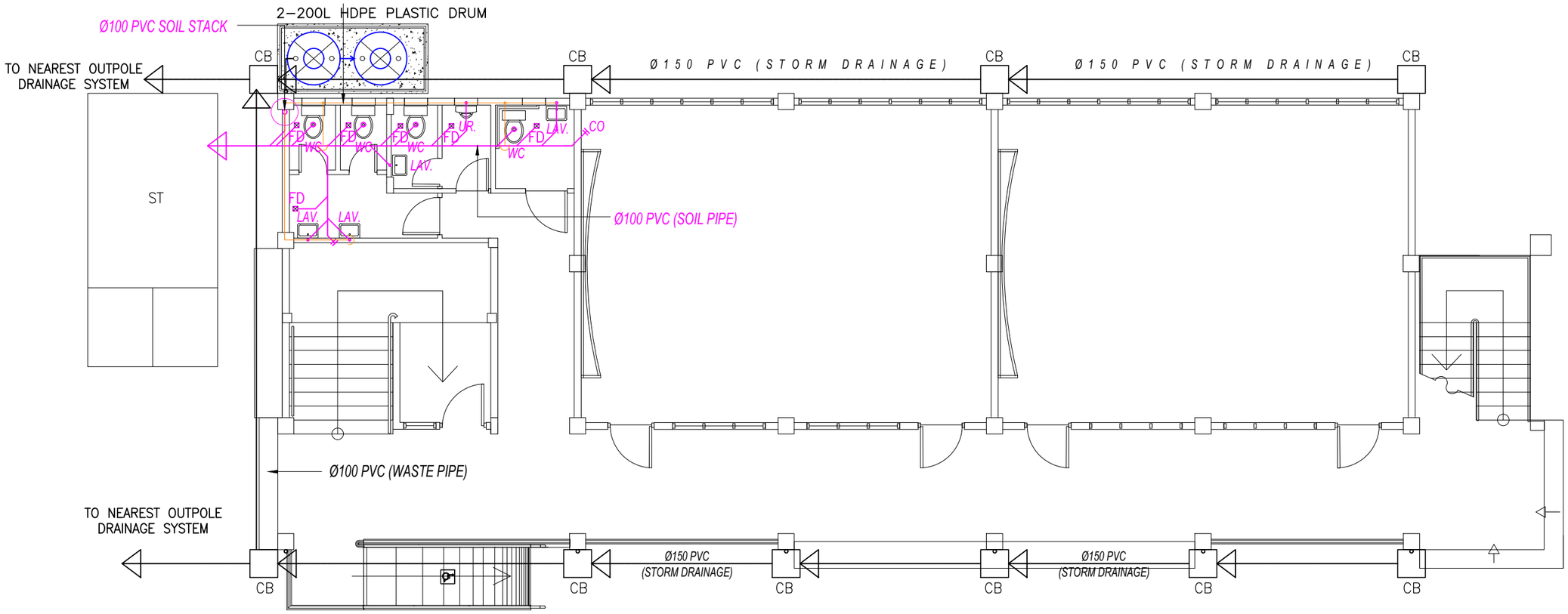

GROUND FLOOR DRAINAGE, WASTE & VENT LAYOUT PLAN

SCALE 1:150M.

	PROJECT TITLE:	PROJECT ENGINEER:	RECOMMENDING APPROVAL:	CONCURRED BY:	APPROVED BY:		SPECIAL PROJECT TEAM/ PLANNING & DESIGN	SHEET NO.
REPUBLIC OF THE PHILIPPINES OFFICE OF THE CITY ENGINEER CITY OF NAGA	PROPOSED TWO (2) STOREY, FOUR (4)-CLASSROOM, SCHOOL BUILDING LOCATION: DEL ROSARIO HIGH SCHOOL, BRGY. DEL ROSARIO, NAGA CITY	JEMAEL S. TABINAS ENGINEER II	NELSON B. PRILLES,me,rmp. ENGINEER III		ALEXANDER N. CANING ACTING CITY ENGINEER	NELSON S. LEGACION CITY MAYOR	KIM R. REFUGIO	P_1 P_9

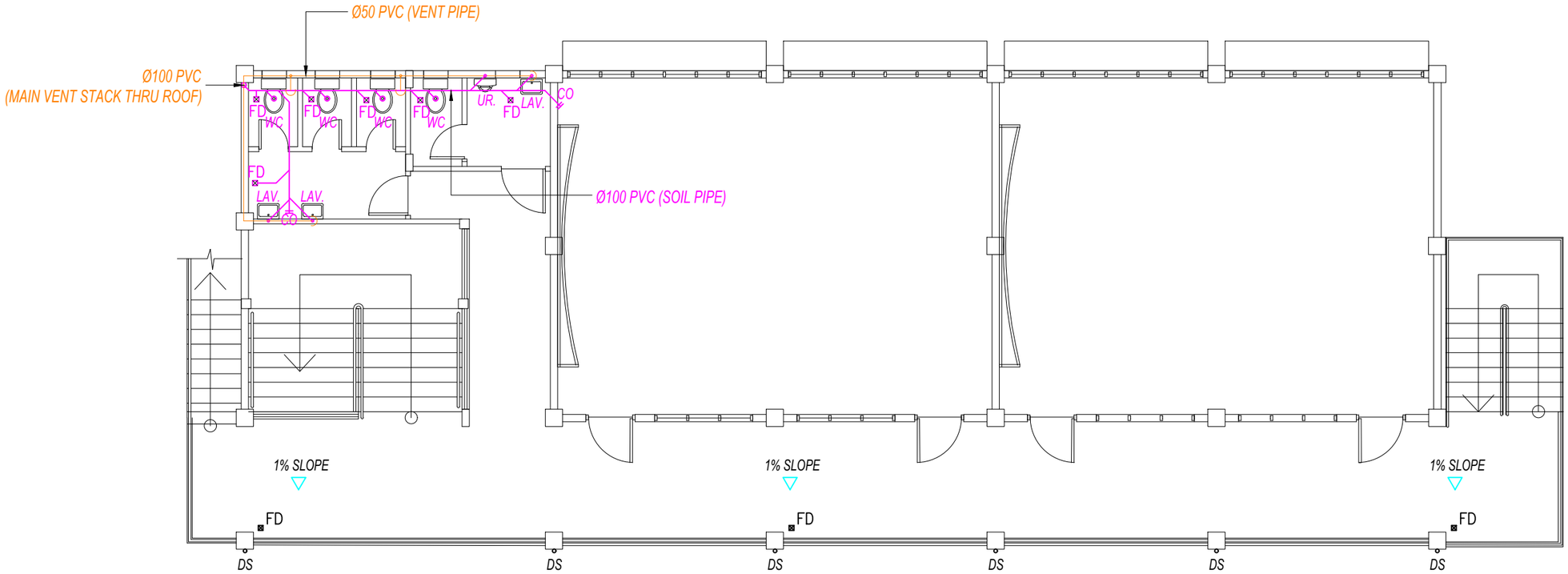

SECOND FLOOR
DRAINAGE, WASTE & VENT LAYOUT PLAN

SCALE 1:150M.

	PROJECT TITLE:	PROJECT ENGINEER:	RECOMMENDING APPROVAL:	CONCURRED BY:	APPROVED BY:		SPECIAL PROJECT TEAM/ PLANNING & DESIGN	SHEET NO.
REPUBLIC OF THE PHILIPPINES OFFICE OF THE CITY ENGINEER CITY OF NAGA	PROPOSED TWO (2) STOREY, FOUR (4)-CLASSROOM, SCHOOL BUILDING LOCATION: DEL ROSARIO HIGH SCHOOL, BRGY. DEL ROSARIO, NAGA CITY	JEMAEL S. TABINAS ENGINEER II	NELSON B. PRILLES,me,rmp. ENGINEER III		ALEXANDER N. CANING ACTING CITY ENGINEER	NELSON S. LEGACION CITY MAYOR	KIM R. REFUGIO	P_2 P_9

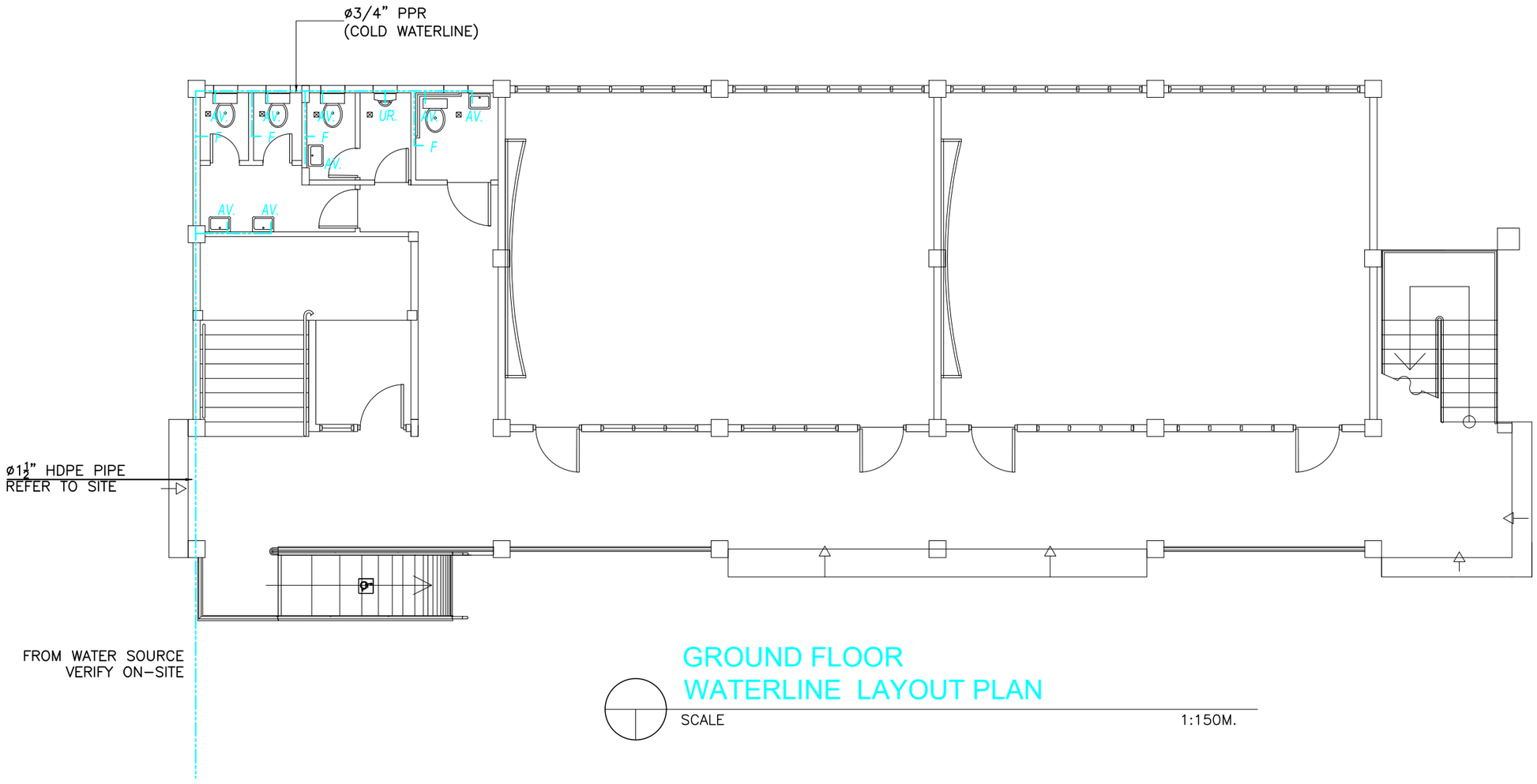

GROUND FLOOR WATERLINE LAYOUT PLAN

SCALE 1:150M.

	PROJECT TITLE:	PROJECT ENGINEER:	RECOMMENDING APPROVAL:	CONCURRED BY:	APPROVED BY:		SPECIAL PROJECT TEAM/ PLANNING & DESIGN	SHEET NO.
REPUBLIC OF THE PHILIPPINES OFFICE OF THE CITY ENGINEER CITY OF NAGA	PROPOSED TWO (2) STOREY, FOUR (4)-CLASSROOM, SCHOOL BUILDING LOCATION: DEL ROSARIO HIGH SCHOOL, BRGY. DEL ROSARIO, NAGA CITY	JEMAEL S. TABINAS ENGINEER II	NELSON B. PRILLES,me,rmp. ENGINEER III		ALEXANDER N. CANING ACTING CITY ENGINEER	NELSON S. LEGACION CITY MAYOR	KIM R. REFUGIO	P3 P9

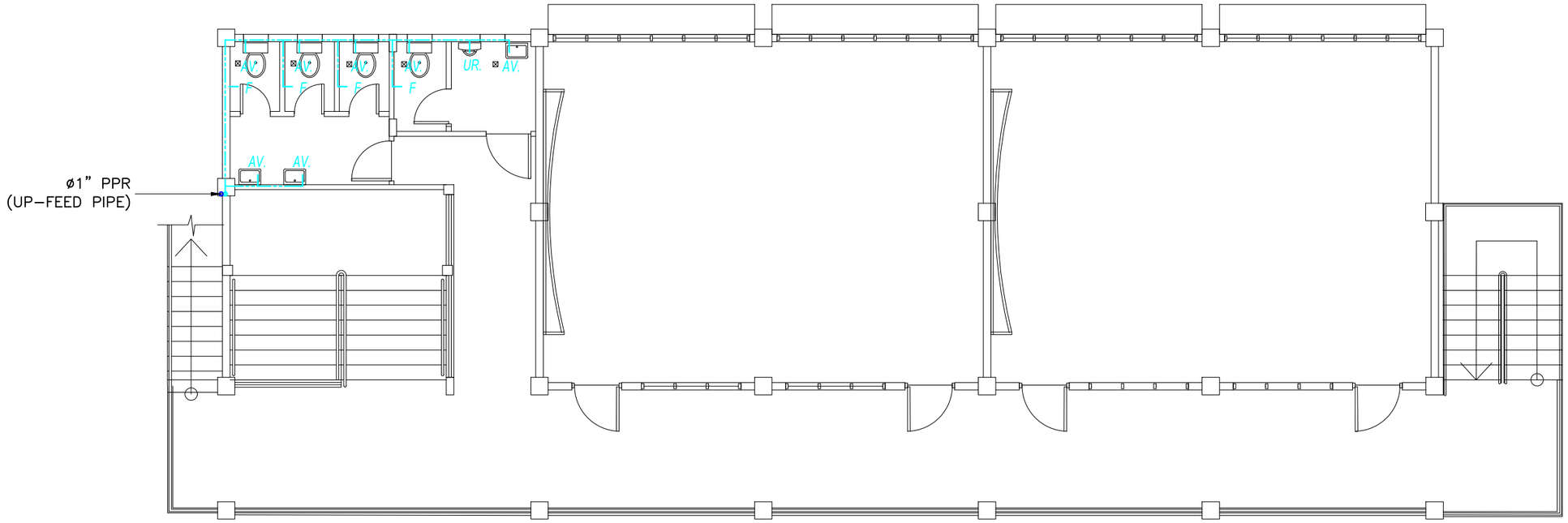

SECOND FLOOR
WATERLINE LAYOUT PLAN

SCALE 1:150M.

	PROJECT TITLE:	PROJECT ENGINEER:	RECOMMENDING APPROVAL:	CONCURRED BY:	APPROVED BY:		SPECIAL PROJECT TEAM/ PLANNING & DESIGN	SHEET NO.
REPUBLIC OF THE PHILIPPINES OFFICE OF THE CITY ENGINEER CITY OF NAGA	PROPOSED TWO (2) STOREY, FOUR (4)-CLASSROOM, SCHOOL BUILDING LOCATION: DEL ROSARIO HIGH SCHOOL, BRGY. DEL ROSARIO, NAGA CITY	JEMAEL S. TABINAS ENGINEER II	NELSON B. PRILLES,me,rmp. ENGINEER III		ALEXANDER N. CANING ACTING CITY ENGINEER	NELSON S. LEGACION CITY MAYOR	KIM R. REFUGIO	P4 P9

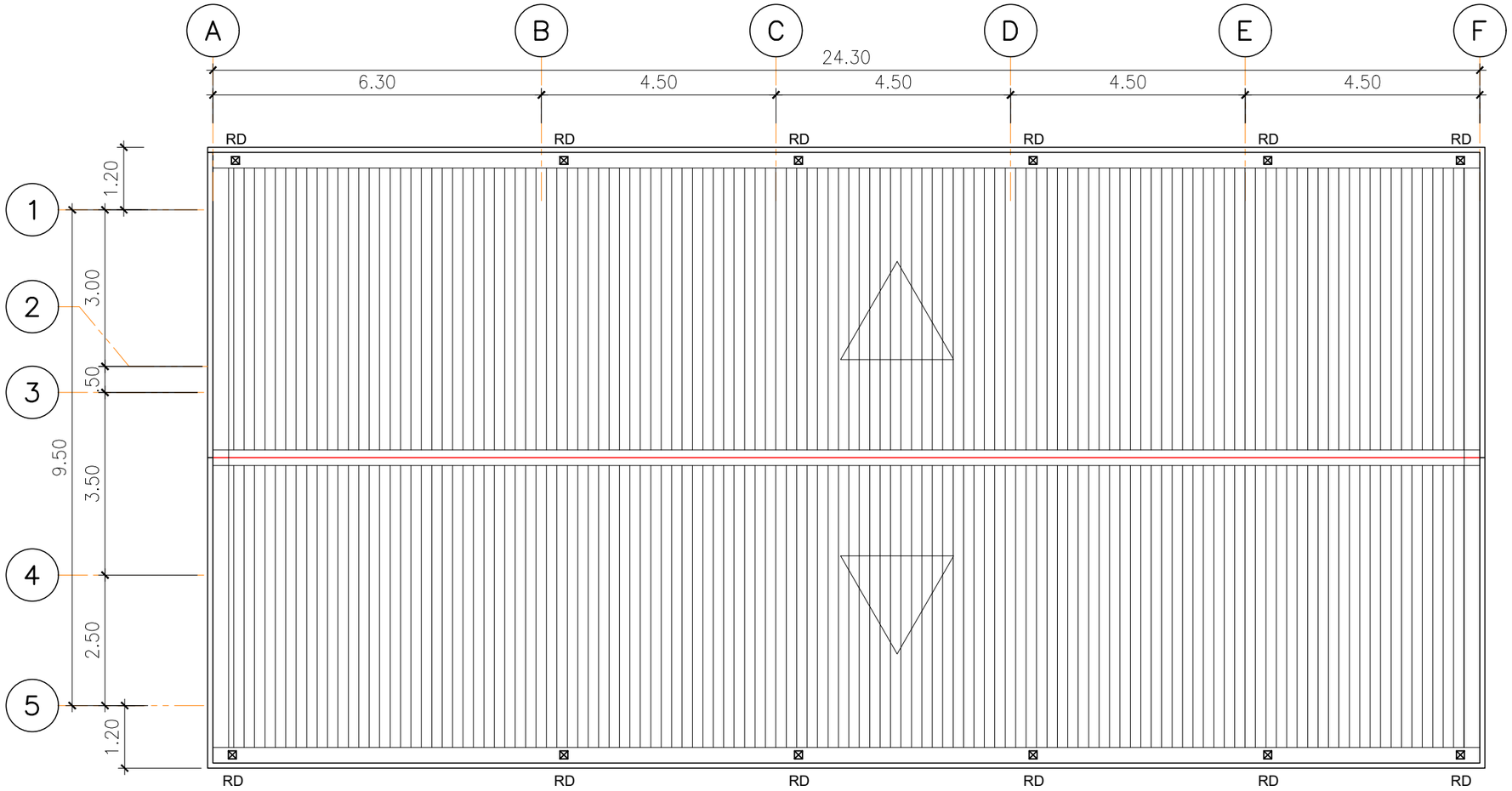

ROOF DRAIN LAYOUT

SCALE 1:100M.

	PROJECT TITLE:	PROJECT ENGINEER:	RECOMMENDING APPROVAL:	CONCURRED BY:	APPROVED BY:		SPECIAL PROJECT TEAM/ PLANNING & DESIGN	SHEET NO.
REPUBLIC OF THE PHILIPPINES OFFICE OF THE CITY ENGINEER CITY OF NAGA	PROPOSED TWO (2) STOREY, FOUR (4)-CLASSROOM, SCHOOL BUILDING LOCATION: DEL ROSARIO HIGH SCHOOL, BRGY. DEL ROSARIO, NAGA CITY	JEMAEL S. TABINAS ENGINEER II	NELSON B. PRILLES,me,rmp. ENGINEER III		ALEXANDER N. CANING ACTING CITY ENGINEER	NELSON S. LEGACION CITY MAYOR	KIM R. REFUGIO	P_5 P_9

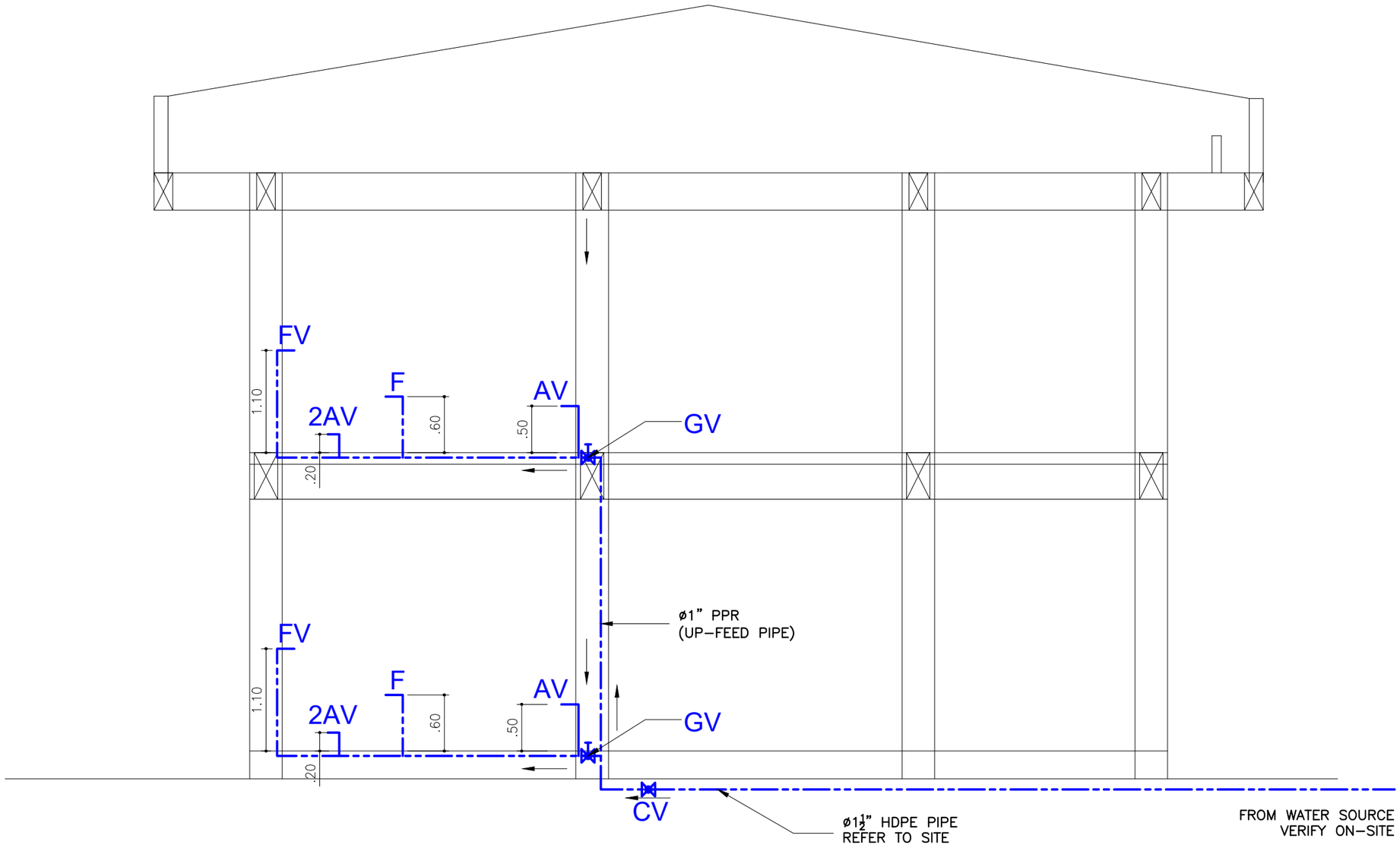

SCHEMATIC DIAGRAM ELEVATED WATER TANK

SCALE 1:50M.

	PROJECT TITLE:	PROJECT ENGINEER:	RECOMMENDING APPROVAL:	CONCURRED BY:	APPROVED BY:		SPECIAL PROJECT TEAM/ PLANNING & DESIGN	SHEET NO.
REPUBLIC OF THE PHILIPPINES OFFICE OF THE CITY ENGINEER CITY OF NAGA	PROPOSED TWO (2) STOREY, FOUR (4)-CLASSROOM, SCHOOL BUILDING LOCATION: DEL ROSARIO HIGH SCHOOL, BRGY. DEL ROSARIO, NAGA CITY	JEMAEL S. TABINAS ENGINEER II	NELSON B. PRILLES,me,rmp. ENGINEER III		ALEXANDER N. CANING ACTING CITY ENGINEER	NELSON S. LEGACION CITY MAYOR	KIM R. REFUGIO	P_8 P_9

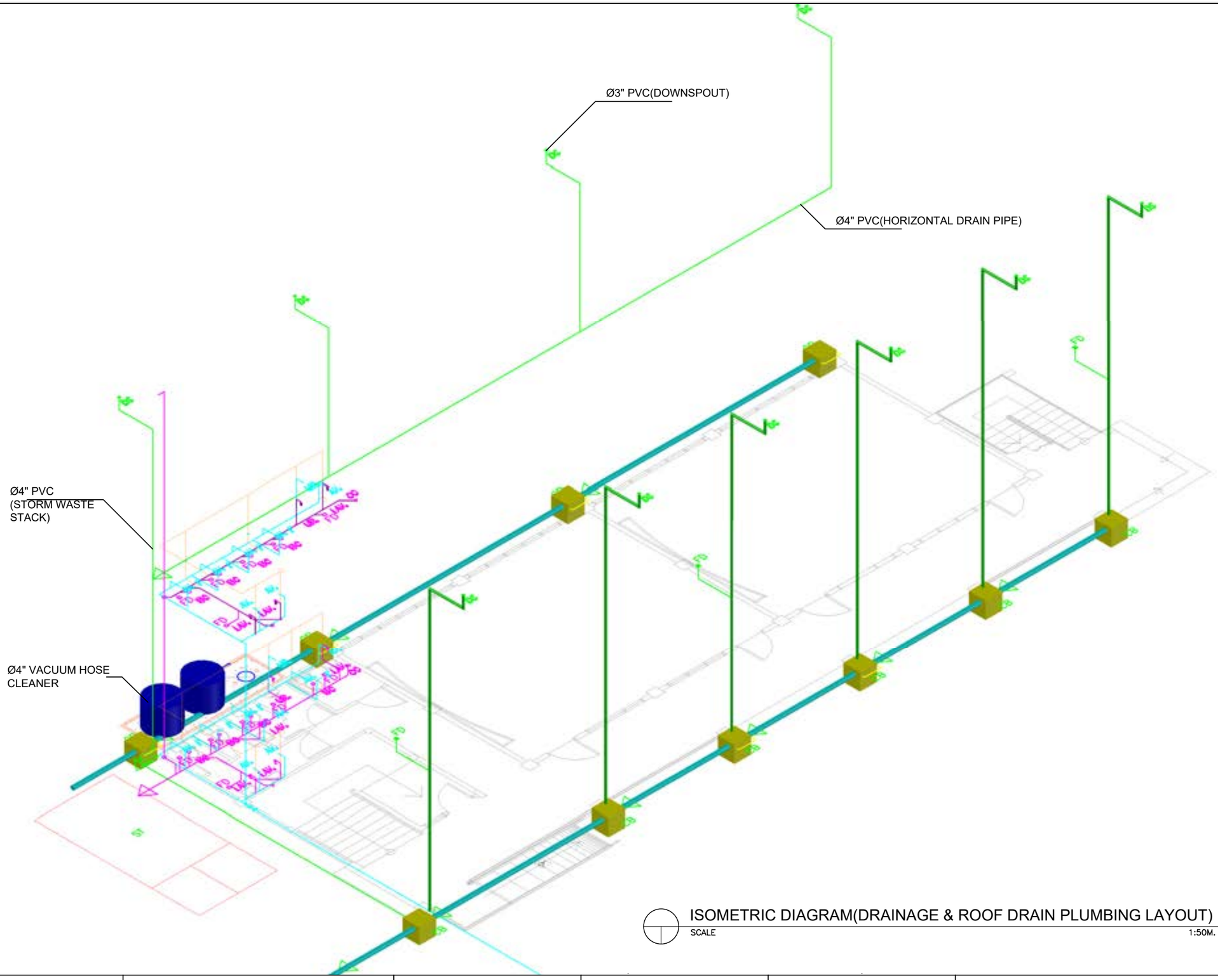

ISOMETRIC DIAGRAM(DRAINAGE & ROOF DRAIN PLUMBING LAYOUT)

SCALE 1:50M.

REPUBLIC OF THE PHILIPPINES OFFICE OF THE CITY ENGINEER CITY OF NAGA	PROJECT TITLE: PROPOSED TWO (2) STOREY, FOUR (4)-CLASSROOM, SCHOOL BUILDING LOCATION: DEL ROSARIO HIGH SCHOOL, BRGY. DEL ROSARIO, NAGA CITY	PROJECT ENGINEER: JEMAEL S. TABINAS ENGINEER II	RECOMMENDING APPROVAL: NELSON B. PRILLES,me,rmp. ENGINEER III	CONCURRED BY:	APPROVED BY: ALEXANDER N. CANING ACTING CITY ENGINEER	NELSON S. LEGACION CITY MAYOR	SPECIAL PROJECT TEAM/ PLANNING & DESIGN KIM R. REFUGIO	SHEET NO. P7 P9

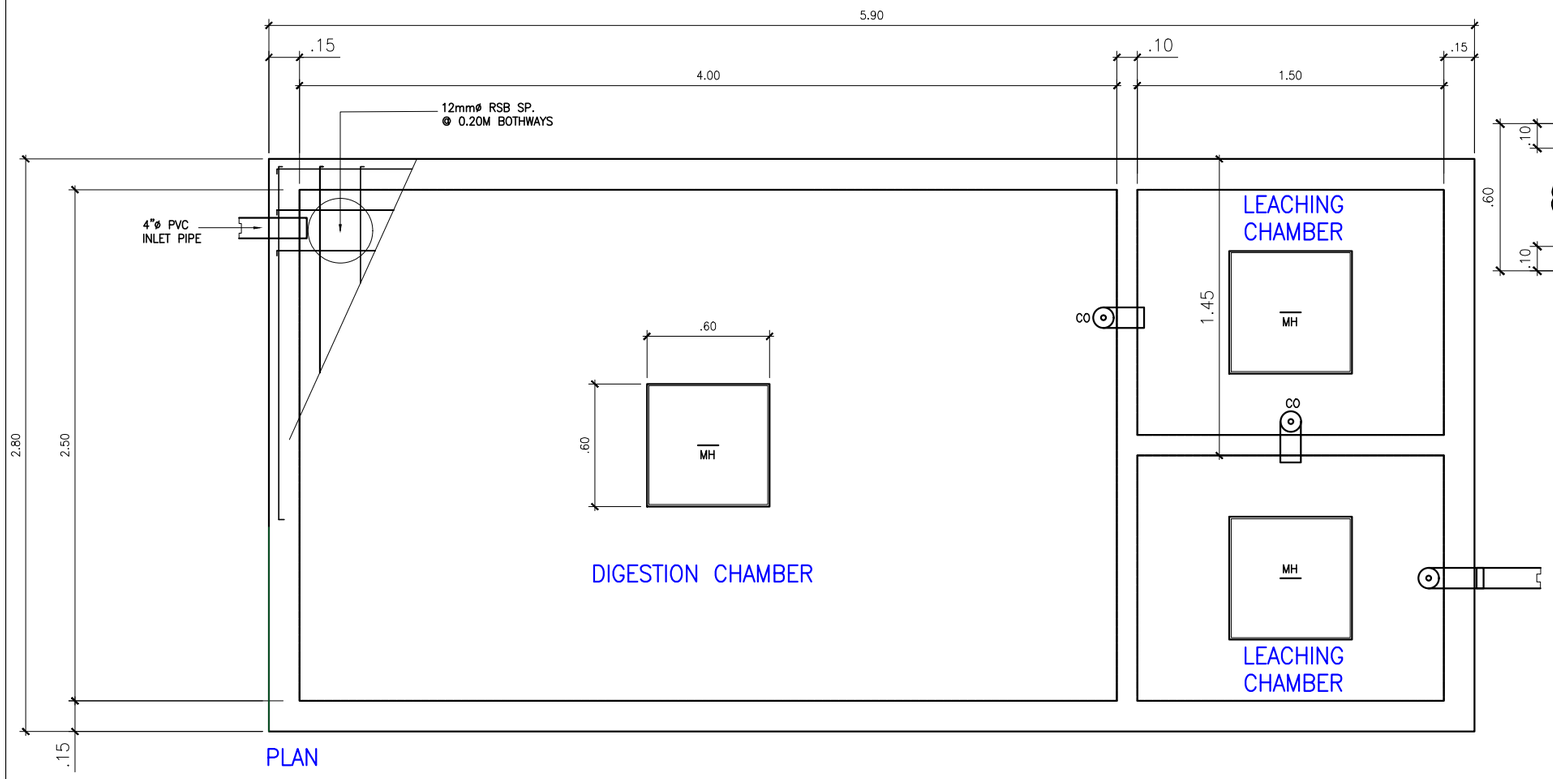

PLAN

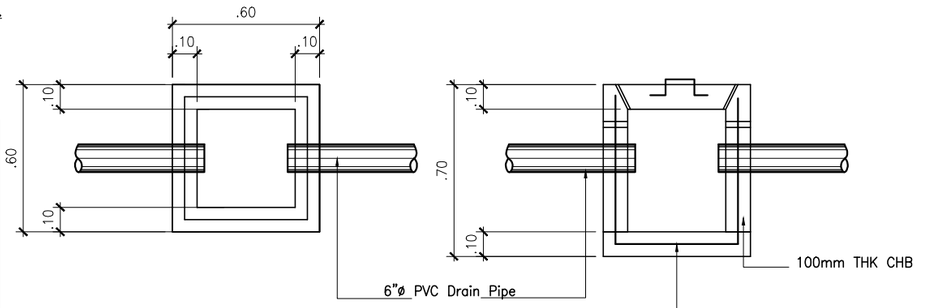

CATCH BASIN DETAIL
SCALE 1:20M.

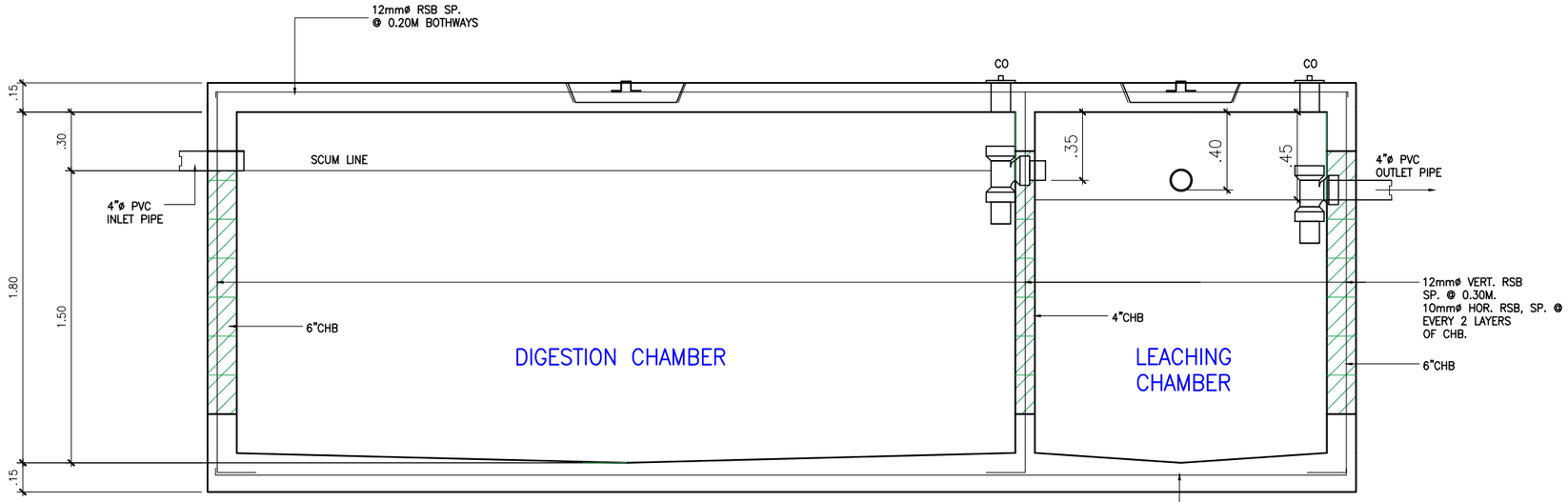

SECTION / ELEVATION

SEPTIC TANK DETAIL
SCALE 1:20M.

SPECIFICATIONS:

01) ALL SANITARY WORKS INCLUDE HEREIN SHALL BE EXECUTED ACCORDING TO THE PROVISIONS OF THE NATIONAL PLUMBING CODE OF THE PHILIPPINES, THE NATIONAL BUILDING CODE OF THE PHILIPPINES, AND ITS IMPLEMENTING RULES AND REGULATIONS.

02) COORDINATE THE DRAWING WITH OTHER RELATED DRAWINGS AND SPECIFICATIONS, THE ARCHITECT AND/OR ENGINEER SHALL BE NOTIFIED IMMEDIATELY OF ANY DISCREPANCY FOUND HEREIN, HIS/HER SHALL BE FINAL.

03) ALL PIPES SHALL BE INSTALLED AS INDICATED, ANY RELOCATION REQUIRED FOR PROPER EXECUTION OF OTHER TRADES SHALL BE WITH APPROVAL OF THE ARCHITECT AND OR ENGINEER.

04) PROPOSED SANITARY UTILITIES SHALL CONFORM TO THE ACTUAL LOCATION, DEPTH AND INVERT ELEVATION OF EXISTING PIPES AND STRUCTURES AS VERIFIED BY THE CONTRACTOR.

05) THE CONTRACTOR SHALL BE RESPONSIBLE FOR ALL REQUIRED FLOOR AND WALL OPENINGS.

06) ALL SLOPES FOR HORIZONTAL DRAINAGE SHALL BE MAINTAIN AT 2% AS MINIMUM UNLESS OTHERWISE NOTED.

07) SIZE OF WATER SUPPLY PIPES TO THE FIXTURES SHALL BE IN ACCORDANCE WITH THE MANUFACTURER'S INSTRUCTIONS.

08) ALL FIXTURE SHALL BE VENTED, UNLESS OTHERWISE NOTED.

09) THE WORK THROUGHOUT SHALL BE EXECUTED IN THE BEST AND MOST THROUGH MANNER KNOWN TO THE TRADE AND TO THE SATISFACTION OF THE ARCHITECT AND/OR ENGINEER.

10) THE CONTRACTOR SHALL VERIFY ALL EXISTING UTILITIES AT THE SITE AND COORDINATE THE WORKS WITH THE SEWER EFFLUENT DISPOSAL AND WATERLINE SERVICE CONNECTING POINT.

11) REFER TO THE TECHNICAL SPECIFICATION FOR DETAILED MATERIAL AND EQUIPMENT SPECIFICATION.

LEGEND

WC	WATER CLOSET	E	FAUCET
LAV	LAVATORY	KS	KITCHEN SINK
FD	FLOOR DRAIN	SH	SHOWER HEAD
CO	CLEAN OUT	SV	SHOWER VALVE
VVS	VERTICAL VENT STACK	ST	SEPTIC TANK
VTR	VENT THRU ROOF	CB	CATCH BASIN
MH	MANHOLE	DS	DOWNSPOUT

SYMBOLS

——— 1/2" dia GI Pipe

——— 4" WASTE PIPE LINE

- - - - - 6" dia drain pipe

	PROJECT TITLE:	PROJECT ENGINEER:	RECOMMENDING APPROVAL:	CONCURRED BY:	APPROVED BY:		SPECIAL PROJECT TEAM/ PLANNING & DESIGN	SHEET NO.
REPUBLIC OF THE PHILIPPINES OFFICE OF THE CITY ENGINEER CITY OF NAGA	PROPOSED TWO (2) STOREY, FOUR (4)-CLASSROOM, SCHOOL BUILDING LOCATION: DEL ROSARIO HIGH SCHOOL, BRGY. DEL ROSARIO, NAGA CITY	JEMAEL S. TABINAS ENGINEER II	NELSON B. PRILLES,me,rmp. ENGINEER III		ALEXANDER N. CANING ACTING CITY ENGINEER	NELSON S. LEGACION CITY MAYOR	KIM R. REFUGIO	P8 P9

RAINWATER HARVESTING TECHNICAL DESCRIPTION

A RAINWATER HARVESTING SYSTEM CONSISTS OF A RAINWATER CATCHMENT SURFACE, CONVEYANCE SYSTEM, AND WATER STORAGE TANK(S). FIGURE 8 SHOWS A SCHEMATIC OF A TYPICAL RAINWATER CATCHMENT SYSTEM.

RAINWATER HARVESTING SYSTEMS CAN SERVE HOUSEHOLDS OR COMMUNITIES OF VARIOUS SIZES. HOUSEHOLD SYSTEMS GENERALLY CATCH RAIN FROM THE ROOFTOPS OF HOMES AND STORE IT IN TANKS ADJACENT TO THE HOMES. WATER IS DRAWN FROM THE TANKS BY MEANS OF TAPS AT THE BASE OF THE TANKS. IN SOME CASES RAINWATER MAY BE RETICULATED WITHIN A HOUSE USING A PUMP/PRESSURE SYSTEM. ALTERNATIVELY THE TANK MAY BE PARTLY BURIED AND A HANDPUMP USED TO WITHDRAW WATER. IN CASES WHERE THE MAJORITY OF HOMES HAVE THATCHED ROOFS, COMMUNITY SYSTEMS ARE POPULAR. THE ROOFS OF LARGE COMMUNITY BUILDINGS, SUCH AS CHURCHES AND SCHOOLS, ARE USED AS CATCHMENT SURFACES AND THE WATER IS STORED IN LARGE TANKS ADJACENT TO THESE BUILDINGS (FIGURE 8). ALTERNATIVELY, IF NO SUITABLE CATCHMENT SURFACE IS AVAILABLE, A SEPARATE CATCHMENT SURFACE IS BUILT ADJACENT TO, OR DIRECTLY OVER, THE WATER STORAGE TANK. RESIDENTS OF THE COMMUNITY WALK TO THESE TANKS, DRAW WATER FROM A TAP AT THE BASE OF THE TANK, AND TRANSPORT IT BACK TO THEIR HOMES FOR DRINKING OR COOKING. IN SOME CASES, INDIVIDUAL HOMES WITH THATCHED ROOFS HAVE ALSO BUILT SEPARATE CATCHMENT SURFACES SERVING HOUSEHOLD STORAGE TANKS.

MATERIALS COMMONLY USED IN THE CONSTRUCTION OF THE ROOFS ARE CORRUGATED ALUMINIUM AND GALVANIZED IRON, CONCRETE, ASPHALT OR FIBREGLASS SHINGLES, TILES WITH A NEOPRENE-BASED COATING, AND MUD, WHICH IS USED PRIMARILY IN RURAL AREAS. ROOFS ARE GENERALLY SLOPED TO AVOID PONDING AND ROOF COATINGS ARE REQUIRED TO BE NON-TOXIC. THE EFFECTIVE ROOF AREA AND THE MATERIAL USED IN CONSTRUCTING THE ROOF INFLUENCE THE COLLECTION EFFICIENCY AND WATER QUALITY. THE GROWING NUMBER OF PERMANENT-MATERIAL ROOFS, AS OPPOSED TO STRAW, GRASS, OR PALM LEAVES, IS ENCOURAGING RAINWATER HARVESTING IN MANY COUNTRIES. BECAUSE NATURAL ROOFING MATERIALS ATTRACT RODENTS AND INSECTS, AND OFTEN YIELD CONTAMINATED AND COLOURED WATER, MOST PEOPLE FIND THEM OBJECTIONABLE FOR USE AS A COLLECTING SURFACE. IN SUCH CASES, SPECIALLY-CONSTRUCTED GROUND SURFACES (CONCRETE, PAVING STONES, OR SOME KIND OF LINER) OR PAVED RUNWAYS CAN ALSO BE USED TO COLLECT AND CONVEY RAINWATER TO STORAGE TANKS OR RESERVOIRS. THESE SURFACES SHOULD BE FENCED TO PREVENT THE ENTRY OF PEOPLE AND ANIMALS.

CONVEYANCE SYSTEMS USUALLY CONSIST OF GUTTERS AND DRAIN PIPES THAT DELIVER RAINWATER FROM THE CATCHMENT AREA INTO THE STORAGE TANKS. THE CONVEYANCE SYSTEMS SHOULD BE OF INERT MATERIAL TO AVOID ADVERSE AFFECTS ON WATER QUALITY. GROUND CATCHMENTS WOULD NORMALLY USE PIPES AND/OR OPEN CHANNELS TO CONVEY RAINWATER TO THE STORAGE TANKS/RESERVOIRS.

THE RAINWATER ULTIMATELY IS STORED IN A STORAGE TANK, WHICH SHOULD ALSO BE CONSTRUCTED OF INERT MATERIAL. REINFORCED CONCRETE, FERROCEMENT, FIBREGLASS, POLYETHYLENE, OR STAINLESS STEEL HAVE BEEN FOUND TO BE SUITABLE. STORAGE TANKS MAY BE CONSTRUCTED AS PART OF A BUILDING OR MAY BE A SEPARATE UNIT SOME DISTANCE AWAY. IN BERMUDA AND THE UNITED STATES VIRGIN ISLANDS, WHERE MOST BUILDINGS ARE DESIGNED WITH ROOFTOP CATCHMENTS, STORAGE TANKS ARE USUALLY CONSTRUCTED UNDER THE BUILDING. THESE TANKS ARE BUILT IN TWO SECTIONS TO FACILITATE CLEANING. ON A LARGE NUMBER OF ISLANDS IN THE PACIFIC OCEAN AND THE SOUTH CHINA SEA, FERROCEMENT TANKS ARE BECOMING INCREASINGLY POPULAR.

IMPORTANT FACTORS TO INCORPORATE INTO THE DESIGN OF A STORAGE TANK INCLUDE ADEQUATE CAPACITY; DIVISION OF TANK INTO TWO SECTIONS OR DUAL TANKS TO FACILITATE CLEANING (WHEN POSSIBLE); PROVISION OF A SLOPED BOTTOM AND PROVISION FOR COLLECTION OF SETTLED GRIT AND SEDIMENT; OVERFLOW PROTECTION; INCLUSION OF A MANHOLE FOR EASY ACCESS FOR CLEANING; PROVISION OF A VENT FOR AIR CIRCULATION (OFTEN THE OVERFLOW PIPE); AND, PROTECTION AGAINST INSECTS AND RODENTS. A WATER-LEVEL INDICATOR IS AN OPTIONAL REFINEMENT OF THIS TECHNOLOGY.

THE QUANTITY OF WATER AVAILABLE FROM A RAINWATER HARVESTING SYSTEM DEPENDS ON THE SIZE OF THE CATCHMENT SURFACE, THE PERCENTAGE CATCHMENT SURFACE AREA THAT IS GUTTERED, THE EFFICIENCY OF THE GUTTERS IN TRANSPORTING THE WATER, AND THE SIZE OF THE STORAGE TANK. IF A CATCHMENT SURFACE IS TOO SMALL, IT MAY NOT PROVIDE SUFFICIENT WATER TO FILL THE TANK. FURTHERMORE, THE RAINFALL PATTERN AND USER-DEMAND ARE ALSO FACTORS THAT MUST BE TAKEN INTO ACCOUNT.

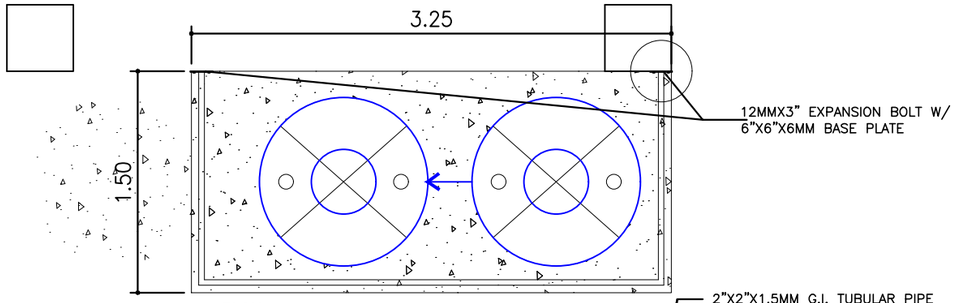

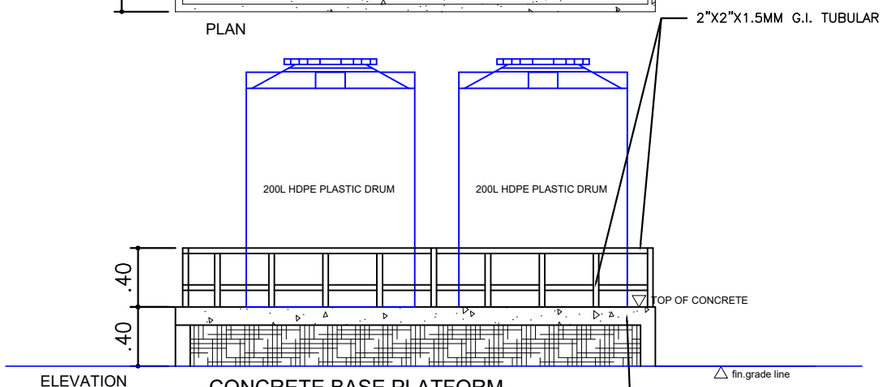

CONCRETE BASE PLATFORM
FOR HDPE PLASTIC DRUM
scale 1:20m.

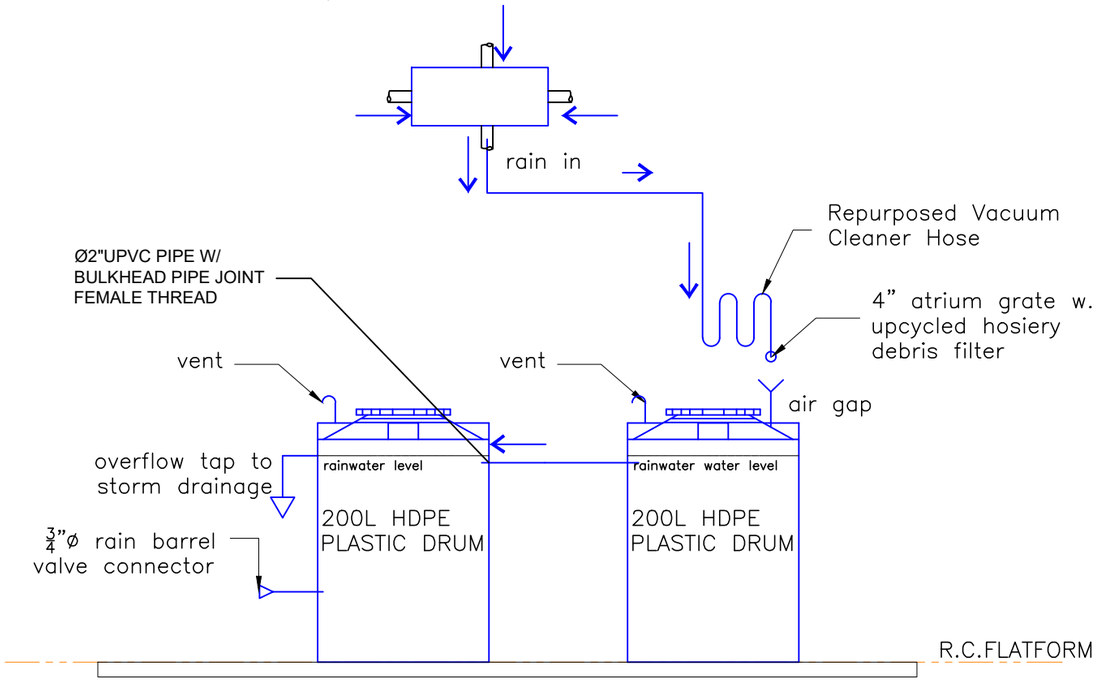

SCHEMATIC DIAGRAM RAINWATER HARVESTING
NOT TO SCALE

REPUBLIC OF THE PHILIPPINES OFFICE OF THE CITY ENGINEER CITY OF NAGA	PROJECT TITLE: PROPOSED TWO (2) STOREY, FOUR (4)-CLASSROOM, SCHOOL BUILDING LOCATION: DEL ROSARIO HIGH SCHOOL, BRGY. DEL ROSARIO, NAGA CITY	PROJECT ENGINEER: JEMAEL S. TABINAS ENGINEER II	RECOMMENDING APPROVAL: NELSON B. PRILLES,me,rmp. ENGINEER III	CONCURRED BY:	APPROVED BY: ALEXANDER N. CANING ACTING CITY ENGINEER	NELSON S. LEGACION CITY MAYOR	SPECIAL PROJECT TEAM/ PLANNING & DESIGN KIM R. REFUGIO	SHEET NO. RWF

GENERAL NOTES:

1.0 STANDARDS AND REFERENCES

THE FOLLOWING SHALL GOVERN THE DESIGN, FABRICATION AND CONSTRUCTION OF THE PROJECT.

1.1 NATIONAL STRUCTURAL CODE OF THE PHILIPPINES (N.S.C.P.). VOL. 1, 6TH EDITION, 2010.

2.0 DESIGN CRITERIA

2.1 LOADINGS

A. DEAD LOAD

CONCRETE	-23.56kN/m³
STEEL	-76.93kN/m³
150mm THK. CHB WALL	-2.73 kPa
100mm THK. CHB WALL	-2.11 kPa

B. LIVE LOAD

ROOF	-1.00 kPa
CLASSROOMS	-1.90 kPa
TOILETS	-2.40 kPa
CORRIDORS ABOVE, STAIRS	-3.80 kPa
CORRIDORS ON GROUND	-4.80 kPa

C. WIND LOAD (NSCP 2010)

BASIC WIND VELOCITY, V = 250 KPH

P = qh [(GCpi)) (DESIGN WIND PRESSURE)

WHERE; qh = VELOCITY PRESSURE, kPa

GCpf = EXTERNAL PRESSURE COEFFICIENT

GCpi = INTERNAL PRESSURE COEFFICIENT

D. SEISMIC LOAD (NSCP 2010)

V = _____ (DESIGN BASE SHEAR)

VmaX = _____ Vmin = 0.11 CalW

Vmin = _____

WHERE; W = TOTAL DEAD LOAD

T= NATURAL PERIOD = C (h)

WHERE; C = NUMERICAL COEFFICIENT

h = BUILDING HEIGHT

I = IMPORTANCE FACTOR = 1.50

R = NUMERICAL FACTOR = 8.50

SEISMIC COEFFICIENT Cv = 0.44Nv

Ca = 0.64N

NEAR SOURCE FACTOR (10km) Nv = 1.2

Na = 1.0

Z = SEISMIC ZONE = 0.40 (ZONE 4)

S = SOIL TYPE = D

2.2 DESIGN STRESSES

A. CONCRETE

B. REINFORCING BARS

a. FOR BARS 16mmØ AND GREATER fy = 275 MPa (40,00 psi)

b. FOR BARS LESS THAN 16mmØ fy = 230 MPa (33,000 psi)

C. STRUCTURAL STEEL, ASTM-A36

FOR TRUSSES, BRACINGS, & STRUTS fy = 248 MPa (36,000 psi)

D. PURLINS

COLD FORMED LIGHT GAGE SHAPES fy = 248 MPa (36,000 psi)

E. MASONRY UNIT (CHB)

NON-LOAD BEARING CHB WALLS fm" = 3.45 MPa (500 psi)

F. WELDS-USED E-60xx ELECTRODE

a. Ft = 96.60 MPa (14,000 psi) b. Fv = 69 MPa (10,000 psi)

3.0 FOUNDATION

3.1 ASSUMED SOIL BEARING CAPACITY SHALL BE 96 KPa (2,000 PSF)

3.1.1 IN CASE THE ACTUAL LOCATION OF THE STRUCTURE IS LESS THAN THE ASSUMED DISTANCE FROM THE SEISMIC SOURCE OF 40km; NOTIFY THE DIRECTOR, BUREAU OF DESIGN FOR PROPER REVISION OF THE DESIGN. REFER TO THE SEISMIC SOURCE MAP PROVIDED IN THE NATIONAL STRUCTURAL CODE OF THE PHILIPPINES OR PHIVOLCS SEISMIC SOURCE MAP.

3.1.2 SOIL TEST SHALL BE CONDUCTED PRIOR TO START OF CONSTRUCTION.

3.1.3 IN CASE THE ACTUAL SOIL BEARING CAPACITY IS FOUND LESS THAN THE ASSUMED, 144 kPa; NOTIFY THE DIRECTOR, BUREAU OF DESIGN FOR PROPER REVISION OF FOUNDATION.

3.1.4 NO FOOTING SHALL REST ON FILL.

3.1.5 BOTTOM OF FOOTING SHALL BE AT LEAST 1.00m> BELOW NATURAL GRADE LINE.

3.1.6 SOIL BEARING CAPACITY SHALL BE INCREASED BY 33% WHEN IN COMBINATION WITH SEISMIC OR WIND LOAD.

3.2 ALL COLUMN FOOTINGS & TIE BEAMS SHALL REST ON 150mm THK. WELL COMPACTED BOULDER.

3.3 BACK FILL SHALL BE PLACED IN LAYER AND EACH LAYER SHALL BE 200 mm THK. AND SHALL BE COMPACTED TO 95% MAXIMUM DRY DENSITY.

3.4 WHERE LOOSE/SOFT MATERIAL IS ENCOUNTERED AT DEPTH OF EMBEDMENT INDICATED, EXCAVATE TO FIRM LAYER AND REPLACE LOOSE/MATERIALS UNDERNEATH THE FOOTING WITHIN THE FOOTING AREA PLUS ½ DEPTH OF SOFT MATERIAL ON ALL SIDES WITH SELECT GRANULAR BACKFILL. COMPACT SELECT GRANULAR BACKFILL TO 95% OF MAXIMUM DRY DENSITY.

4.0 MATERIALS

4.1 CONCRETE

4.1.1 CONCRETE COVER OVER REINFORCING BARS SHALL BE AS FOLLOWS:

A. FOOTINGS, FOOTING-TIE BEAMS (CAST AGAINST FORMS)	75mm
B. BEAMS AND COLUMNS (TO STIRRUPS AND TIES)	40mm
C. WALLS, SIDE OF FOOTING-TIE BEAMS (CAST AGAINST FORMS)	40mm
D. SUSPENDED SLAB	20mm

4.1.2 BEFORE CONCRETE IS POURED, CHECK WITH ALL TRADES TO ENSURE PROPER PLACEMENT OF ALL OPENINGS, SLEEVES, CURBS, CONDUITS, ETC. RELATING TO THE WORK.

4.2 REINFORCING BARS

4.2.1 ALL REINFORCING BARS SHALL BE CLEAN OF RUST, GREASE OR OTHER MATERIALS THAT WILL IMPAIR BOND.

4.2.2 ALL REINFORCING BARS SHALL BE ACCURATELY AND SECURELY PLACED BEFORE POURING CONCRETE OR APPLYING MORTAR OR GROUT.

4.23 LAPPED SPLICES SHALL BE ACCURATELY AND SECURELY PLACED BEFORE POURING CONCRETE OR APPLYING MORTAR OR GROUT.

4.2.4 UNLESS OTHERWISE INDICATED, SPLICING OF REINFORCEMENT SHALL BE IN ACCORDANCE WITH ACI-318M, EXCEPT THAT THE MINIMUM LAP SPLICE SHALL BE 40 BAR DIAMETER BUT NOT LESS THAN 600mm.

4.2.5 UNLESS SHOWN OTHERWISE ON PLANS, SPLICES SHALL BE AS FOLLOWS:

A. INTERMEDIATE BEAMS: TOP BARS SHALL BE SPLICED AT MID-SPAN, AND BOTTOM BARS AT THE SUPPORT.

B. BEAMS FRAMING TO COLUMNS: TOP BARS SHALL BE SPLICED AT MID-SPAN AND BOTTOM BARS SHALL BE NOT BE SPLICED W/IN A DISTANCE OF TWICE THE MEMBER DEPTH FROM THE FACE OF THE COLUMN. THE SPLICED LENGTH SHALL NOT BE LESS THAN 600mm.

C. COLUMNS: LAP SPLICES SHALL BE MADE WITHIN THE CENTER HALF OF HEIGHT AND THE SPLICE SHALL NOT BE LESS THAN 30 BAR DIAMETER. WELDING OR THE USE OF APPROVED MECHANICAL DEVICES MAY BE PERMITTED PROVIDED NOT MORE THAN ALTERNATE BARS ARE WELDED OR SPLICED AT ANY LEVEL AND THE MINIMUM VERTICAL DISTANCE BETWEEN TWO ADJACENT BAR SPLICES SHALL BE 600mm.

D. CHB WALLS: VERTICAL BARS SHALL BE SPLICED AT THE TOP OF WALL FOOTINGS OR FOOTING-TIE BEAMS AND AT THE BOTTOM OF REINFORCED CONCRETE LINTEL BEAMS OR BEAMS.

4.2.6 UNLESS OTHERWISE INDICATED: ALL BEAMS TERMINATING AT A COLUMN SHALL HAVE TOP AND BOTTOM BARS EXTENDING TO THE FAR FACE OF THE COLUMN, TERMINATING IN A STANDARD 90 HOOK LENGTH OF ANCHORAGE SHALL NOT BE LESS THAN 600mm.

4.2.7 SHOP DRAWING FOR REINFORCEMENT SHALL BE SUBMITTED FOR APPROVAL OF THE ENGINEER PRIOR TO FABRICATION & INSTALLATION.

4.2.8 DEVELOPMENT LENGTH (Ld) OF REINFORCING BARS SHALL BE AS FOLLOWS:

DEVELOPMENT LENGTH	SIZE OF REBARS
	10 mm 170 mm
	12 mm 220 mm
	16 mm 270 mm
	20 mm 380 mm
	25 mm 600 mm

4.3 STRUCTURAL STEEL

4.3.1 ALL STRUCTURAL STEEL SHALL CONFORM TO ASTM A36 AND SHALL HAVE A MAXIMUM YIELD STRESS, Fy = 248 MPa (36,000 psi)

4.3.2 ALL STRUCTURAL STEEL SHALL BE FABRICATED AND ERECTED IN ACCORDANCE WITH THE AISC SPECIFICATIONS AND CODE OF STANDARD PRACTICE AS AMMENDED TO DATE.

4.3.3 ALL BOLTS SHALL CONFORM TO ASTM A-307 UNLESS OTHERWISE INDICATED.

4.3.4 SHOP AND FIELD WELDING SHALL BE IN ACCORDANCE WITH AWS D1.1 AND PERFORMED BY QUALIFIED WELDERS.

4.3.5 UNLESS OTHERWISE INDICATED, WELDING ELECTRODES SHALL BE E60.

4.3.6 NO STEEL SHALL BE FABRICATED OR ERECTED UNTIL SHOP DRAWINS HAVE BEEN APPROVED BY THE STRUCTURAL ENGINEER.

4.3.7 WELDS/(CONFORM WITH AMERICAN WELDING STANDARDS) USING E 60xx ELECTRODES. fy = 93.77 MPa.

4.3.8 ANCHOR BOLTS (CONFORM WITH ASTM A-307) ft = 96.60 MPa. fv = 69 MPa.

4.4 CONCRETE HOLLOW BLOCKS (CHB):

4.4.1 UNLESS OTHERWISE INDICATED, CHB USED IN THIS WORK SHALL HAVE A MANIMUM ULTIMATE COMPRESSIVE STRENGTH f'm = MPa (500 psi)

4.4.2 ALL CHB CELLS SHALL BE FILLED SOLIDLY WITH GROUT.

5.0 CONSTRUCTION JOINT

5.1 CONSTRUCTION JOINT NOT INDICATED ON THE PLANS SHALL BE MADE SO AS TO LEAST IMPAIR THE STRENGTH OF THE STRUCTURE AND SHALL BE SUBJECT TO THE APPROVAL OF THE ENGINEER EXCEPT SLAB ON GRADE.

5.2 UNLESS SHOWN OTHERWISE, SLAB ON GRADE SHALL HAVE CONTROL JOINTS SPACED AT 600mm MAXIMUM CENTER TO CENTER.

5.3 BEAMS CONSTRUCTION JOINT SHALL BE LOCATED W/ IN THE MIDDLE THIRD OF THE SPAN. IT SHALL BE PROVIDED WITH 3 EXTRA STIRRUPS @ 75mm O.C. ON EACH SIDE OF THE JOINT.

NOTE:

PURSUANT TO SECTION 4 OF ANNEX "A" OF THE REVISED IMPLEMENTING RULES AND REGULATION OF R.A. 9184, APPROVAL BY THE AUTHORIZED DPWH OFFICIALS OF DETAILED ENGINEERING SURVEYS AND DESIGN UNDERTAKEN BY CONSULTANTS NEITHER DIMINISHES THE RESPONSIBILITY OF THE LATTER FOR THE TECHNICAL INTEGRITY OF THE SURVEYS AND DESIGN NOR TRANSFER ANY PART OF THE RESPONSIBILITY TO THE APPROVING OFFICIALS.

THE DESIGN CONSULTANT SHALL BE HELD FULLY RESPONSIBLE FOR THE FAILURE OF THE FACILIT/IES/STRUCTURES DUE TO FAULTY DESIGN EXCEPT FOR THE CHANGES MADE WITHOUT THE CONFORMITY OF THE CONSULTANTS.

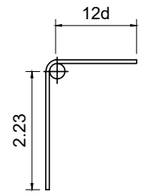

90° HOOK

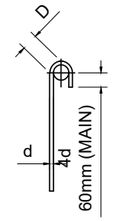

180° HOOK

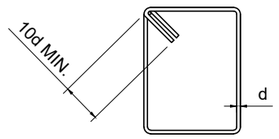

TIE HOOK

BAR SIZE	D	
	90° HOOK	180° HOOK
10mmØ THRU 25mmØ	6d	4d
28mmØ THRU 36mmØ	8d	4d

NOTE:

1. ALL BENDS SHOWN IN DETAILS/SCHEDULES SHALL BE STANDARD HOOK OTHERWISE NOTED.
2. 180° HOOKS MAY BE SUBSTITUED FOR 90° HOOKS.

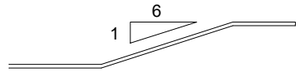

OFFSET

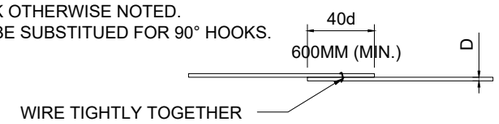

LAP SPLICE

TYP. RE-ENFORCEMENT DETAIL

N O T T O S C A L E

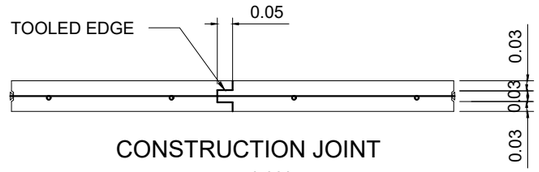

CONSTRUCTION JOINT

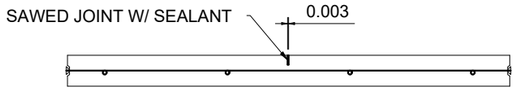

WEAKENED PLANE JOINT

NOTE: CONTROL JOINT CAN BE EITHER CONSTRUCTION JOINT OR WEAKENED PLANE JOINT

CONTROL JOINTS FOR SLAB-ON-FILL

N O T T O S C A L E

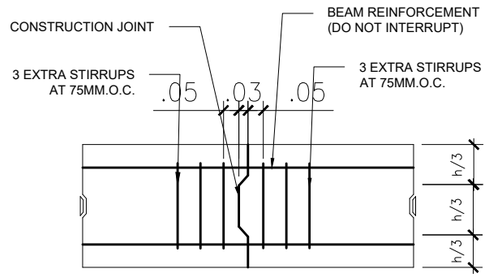

BEAM CONSTRUCTION JOINT

N O T T O S C A L E

	PROJECT TITLE	PROJECT ENGINEER	RECOMMENDING APPROVAL:	CONCURRED BY:	APPROVED BY:		SPECIAL PROJECT TEAM/ PLANNING & DESIGN	SHEET NO.
REPUBLIC OF THE PHILIPPINES OFFICE OF THE CITY ENGINEER CITY OF NAGA	PROPOSED TWO (2) STOREY, FOUR (4)-CLASSROOM, SCHOOL BUILDING DEL ROSARIO HIGH SCHOOL, BRGY. DEL ROSARIO, NAGA CITY	JEMAEL S. TABINAS ENGINEER II	EMMEL M. ADAQUE ENGINEER III		ALEXANDER N. CANING ACTING CITY ENGINEER	NELSON S. LEGACION CITY MAYOR	KIM R. REFUGIO	S_1 S_{11}

NOTE:

PURSUANT TO SECTION 4 OF ANNEX "A" OF THE REVISED IMPLEMENTING RULES AND REGULATION OF R.A. 9184, APPROVAL BY THE AUTHORIZED DPWH OFFICIALS OF DETAILED ENGINEERING SURVEYS AND DESIGN UNDERTAKEN BY CONSULTANTS NEITHER DIMINISHES THE RESPONSIBILITY OF THE LATTER FOR THE TECHNICAL INTEGRITY OF THE SURVEYS AND DESIGN NOR TRANSFER ANY PART OF THE RESPONSIBILITY TO THE APPROVING OFFICIALS.

THE DESIGN CONSULTANT SHALL BE HELD FULLY RESPONSIBLE FOR THE FAILURE OF THE FACILIT/IES/STRUCTURES DUE TO FAULTY DESIGN EXCEPT FOR THE CHANGES MADE WITHOUT THE CONFORMITY OF THE CONSULTANTS.

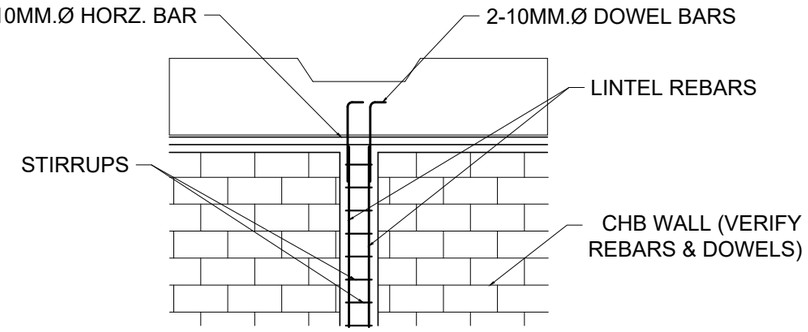

TOP ANCHORAGE OF STIFFENER COLUMN

N O T T O S C A L E

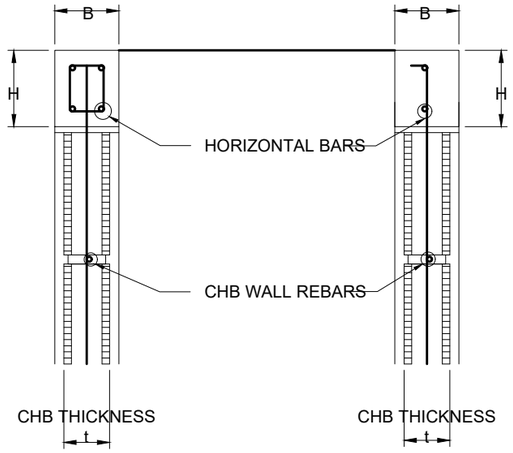

TYPICAL LINTEL BEAM DETAIL

N O T T O S C A L E

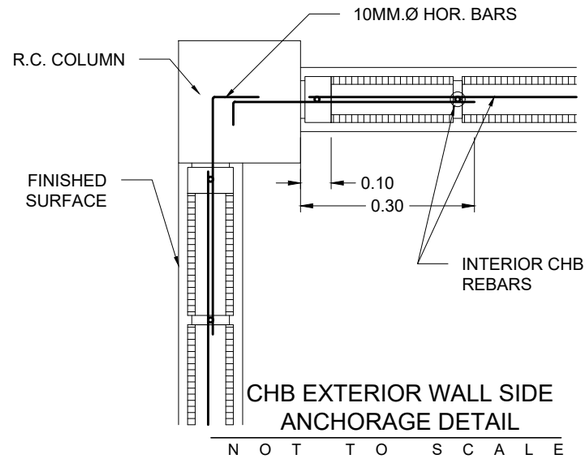

CHB EXTERIOR WALL SIDE ANCHORAGE DETAIL

N O T T O S C A L E

SCHEDULE OF MASONRY WORKS						
LINTEL BEAMS					MASONRY	
CHB WALL t (MM.)	B (MM.)	H (MM.)	HORZ. BARS	STIRRUPS	HORIZONTAL BARS	VERTICAL BARS
100	100	200	2-10MMØ	10MMØ @ 300	10MMØ @ 600 MM.O.C.	10MMØ @ 600 MM.O.C.
125	125	200	4-10MMØ	10MMØ @ 300	10MMØ @ 600 MM.O.C.	10MMØ @ 600 MM.O.C.
150	150	200	4-10MMØ	10MMØ @ 300	10MMØ @ 600 MM.O.C.	10MMØ @ 600 MM.O.C.
200	200	200	4-10MMØ	10MMØ @ 300	10MMØ @ 600 MM.O.C.	10MMØ @ 600 MM.O.C.

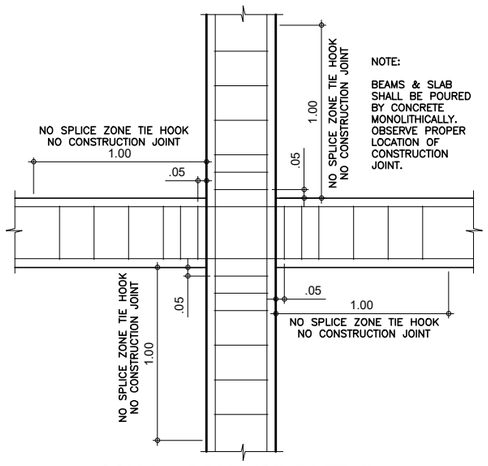

COLUMN-BEAM JOINT DETAIL

N O T T O S C A L E

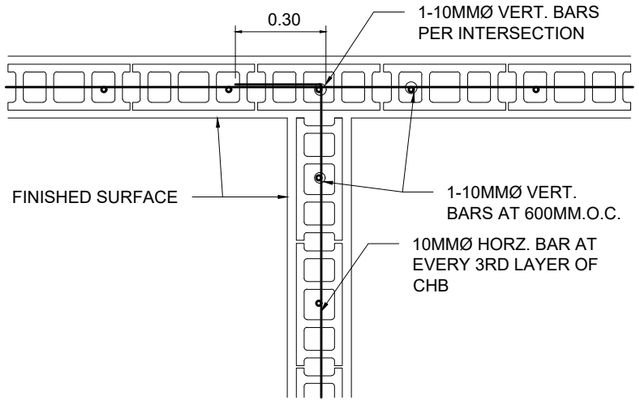

WALL INTERSECTION

N O T T O S C A L E

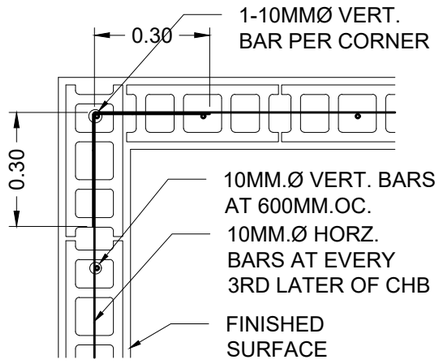

CORNER WALL DETAIL

N O T T O S C A L E

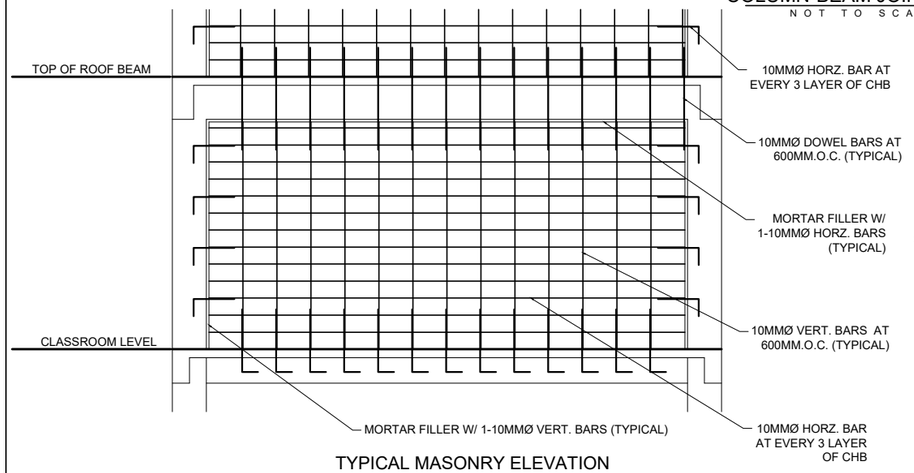

TYPICAL MASONRY ELEVATION

N O T T O S C A L E

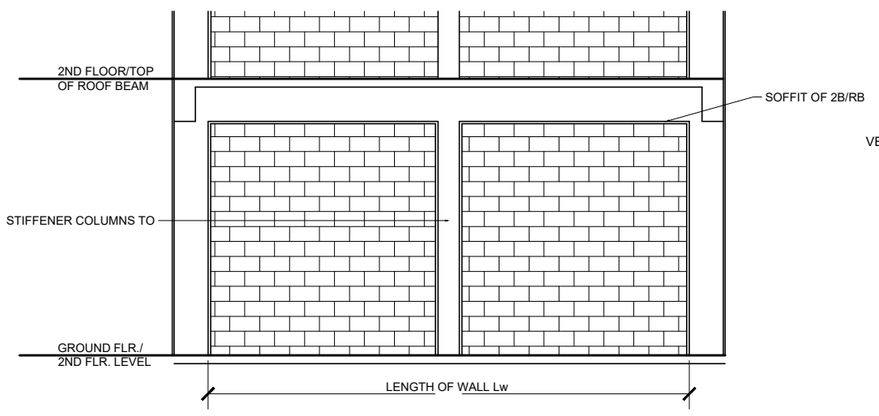

TYP. CHB ELEV. SHOWING LOCATION OF LINTEL BEAMS & STIFFENER COLUMNS

N O T T O S C A L E

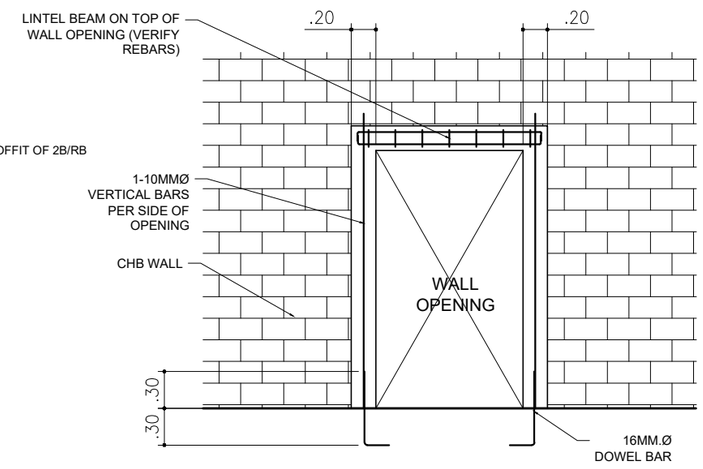

TOP ANCHORAGE OF STIFFENER COLUMN

N O T T O S C A L E

	PROJECT TITLE	PROJECT ENGINEER	RECOMMENDING APPROVAL:	CONCURRED BY:	APPROVED BY:		SPECIAL PROJECT TEAM/ PLANNING & DESIGN	SHEET NO.
REPUBLIC OF THE PHILIPPINES OFFICE OF THE CITY ENGINEER CITY OF NAGA	PROPOSED TWO (2) STOREY, FOUR (4)-CLASSROOM, SCHOOL BUILDING DEL ROSARIO HIGH SCHOOL, BRGY. DEL ROSARIO, NAGA CITY	JEMAEL S. TABINAS ENGINEER II	EMMEL M. ADAQUE ENGINEER III		ALEXANDER N. CANING ACTING CITY ENGINEER	NELSON S. LEGACION CITY MAYOR	KIM R. REFUGIO	S_2 S_{11}

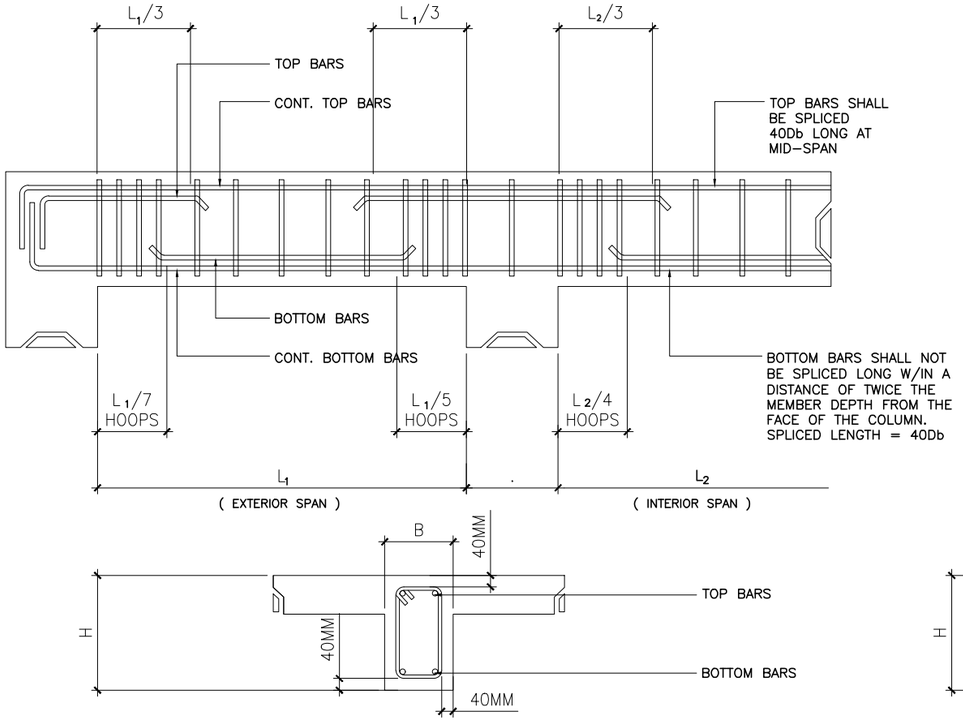

TYPICAL BEAM DETAIL

NOT TO SCALE

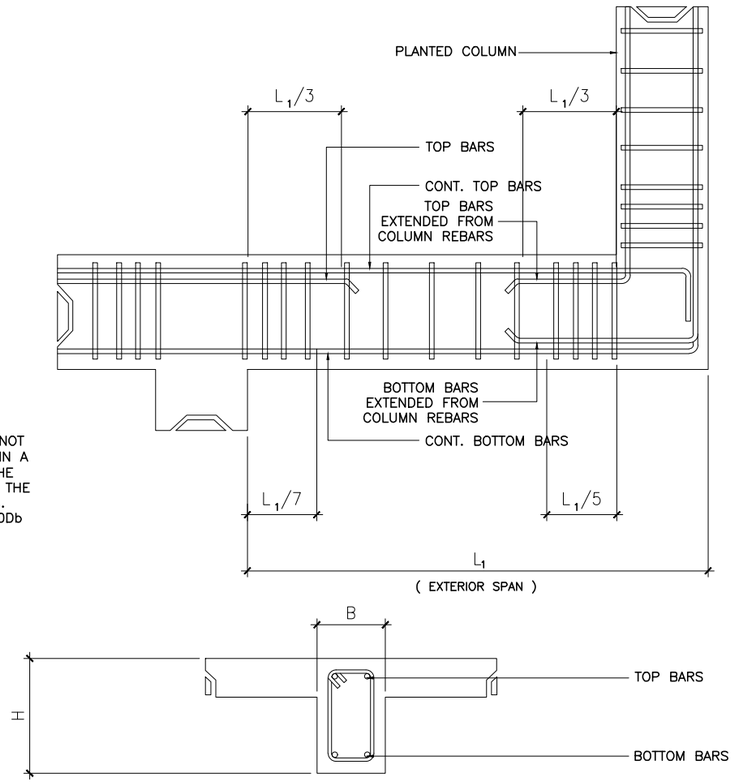

TYPICAL CANTILEVER BEAM DETAIL

NOT TO SCALE

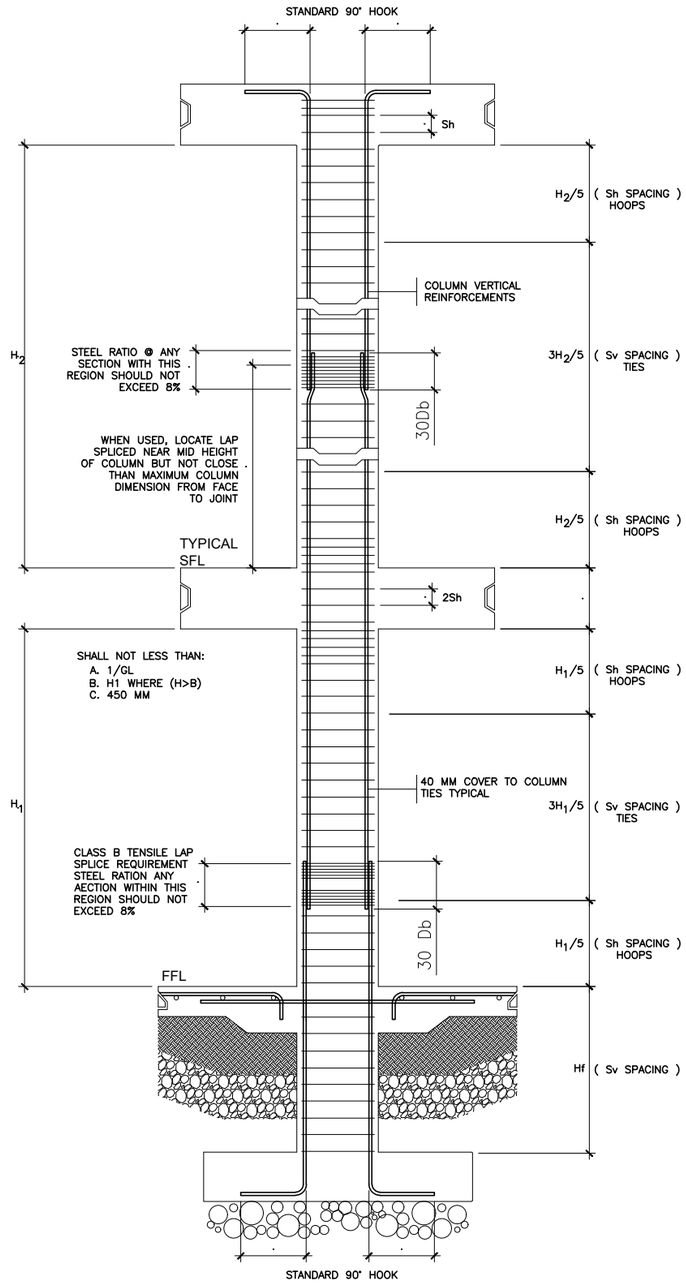

TYPICAL COLUMN DETAIL

NOT TO SCALE

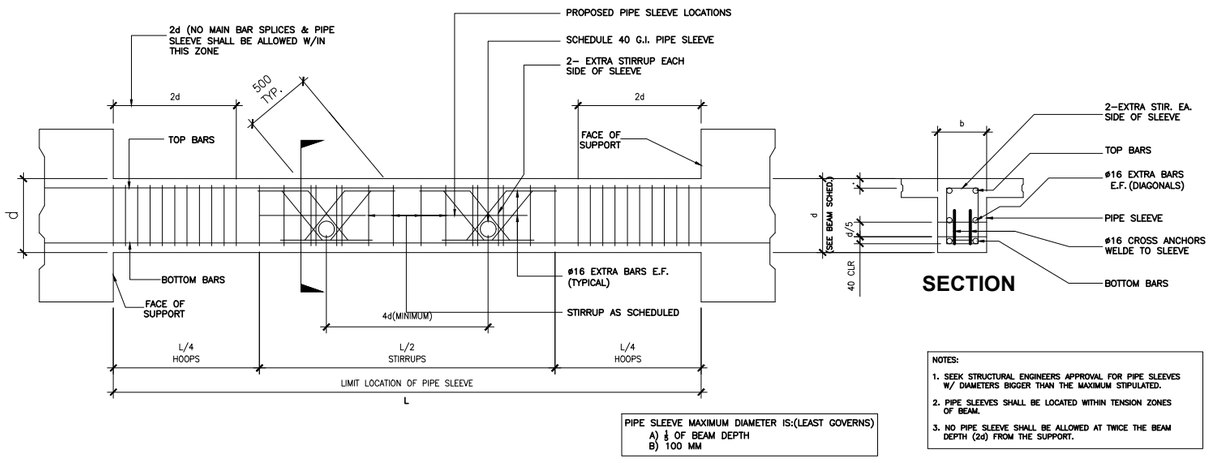

PIPE SLEEVE MAXIMUM DIAMETER IS:(LEAST GOVERNS)
A) 1/3 OF BEAM DEPTH
B) 100 MM

NOTES:
1. SEEK STRUCTURAL ENGINEERS APPROVAL FOR PIPE SLEEVES W/ DIAMETERS BIGGER THAN THE MAXIMUM STIPULATED.
2. PIPE SLEEVES SHALL BE LOCATED WITHIN TENSION ZONES OF BEAM.
3. NO PIPE SLEEVE SHALL BE ALLOWED AT TWICE THE BEAM DEPTH (2d) FROM THE SUPPORT.

PIPE SLEEVE THRU BEAM DETAILS

NOT TO SCALE

REPUBLIC OF THE PHILIPPINES OFFICE OF THE CITY ENGINEER CITY OF NAGA	PROJECT TITLE PROPOSED TWO (2) STOREY, FOUR (4)-CLASSROOM, SCHOOL BUILDING DEL ROSARIO HIGH SCHOOL, BRGY. DEL ROSARIO, NAGA CITY	PROJECT ENGINEER JEMAEL S. TABINAS ENGINEER II	RECOMMENDING APPROVAL: EMMEL M. ADAQUE ENGINEER III	CONCURRED BY:	APPROVED BY: ALEXANDER N. CANING ACTING CITY ENGINEER	NELSON S. LEGACION CITY MAYOR	SPECIAL PROJECT TEAM/ PLANNING & DESIGN KIM R. REFUGIO	SHEET NO. S3 S11

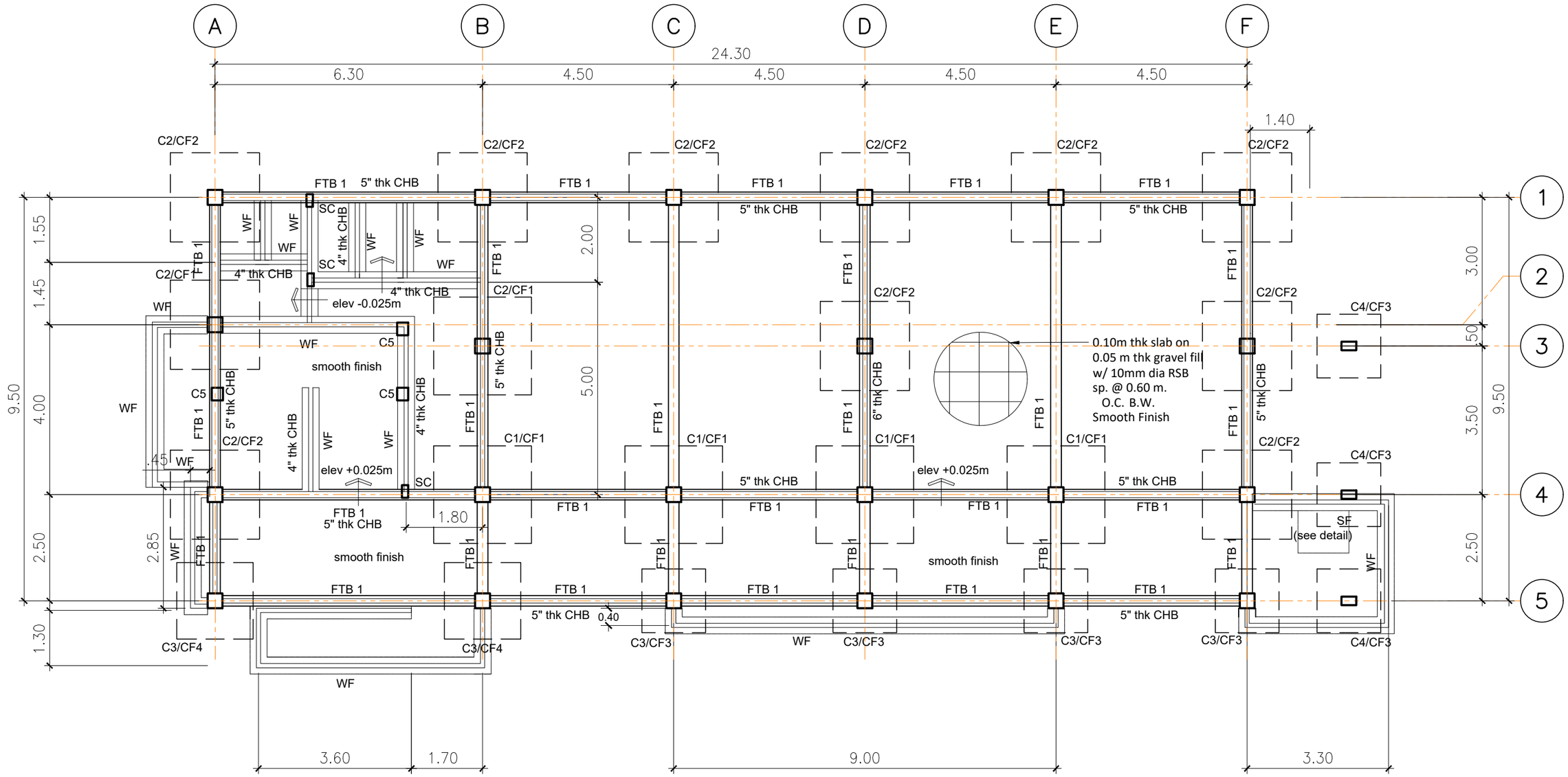

FOUNDATION PLAN

SCALE 1:100M.

	PROJECT TITLE	PROJECT ENGINEER	RECOMMENDING APPROVAL:	CONCURRED BY:	APPROVED BY:		SPECIAL PROJECT TEAM/ PLANNING & DESIGN	SHEET NO.
REPUBLIC OF THE PHILIPPINES OFFICE OF THE CITY ENGINEER CITY OF NAGA	PROPOSED TWO (2) STOREY, FOUR (4)-CLASSROOM, SCHOOL BUILDING DEL ROSARIO HIGH SCHOOL, BRGY. DEL ROSARIO, NAGA CITY	JEMAEL S. TABINAS ENGINEER II	EMMEL M. ADAQUE ENGINEER III		ALEXANDER N. CANING ACTING CITY ENGINEER	NELSON S. LEGACION CITY MAYOR	KIM R. REFUGIO	S4 S11

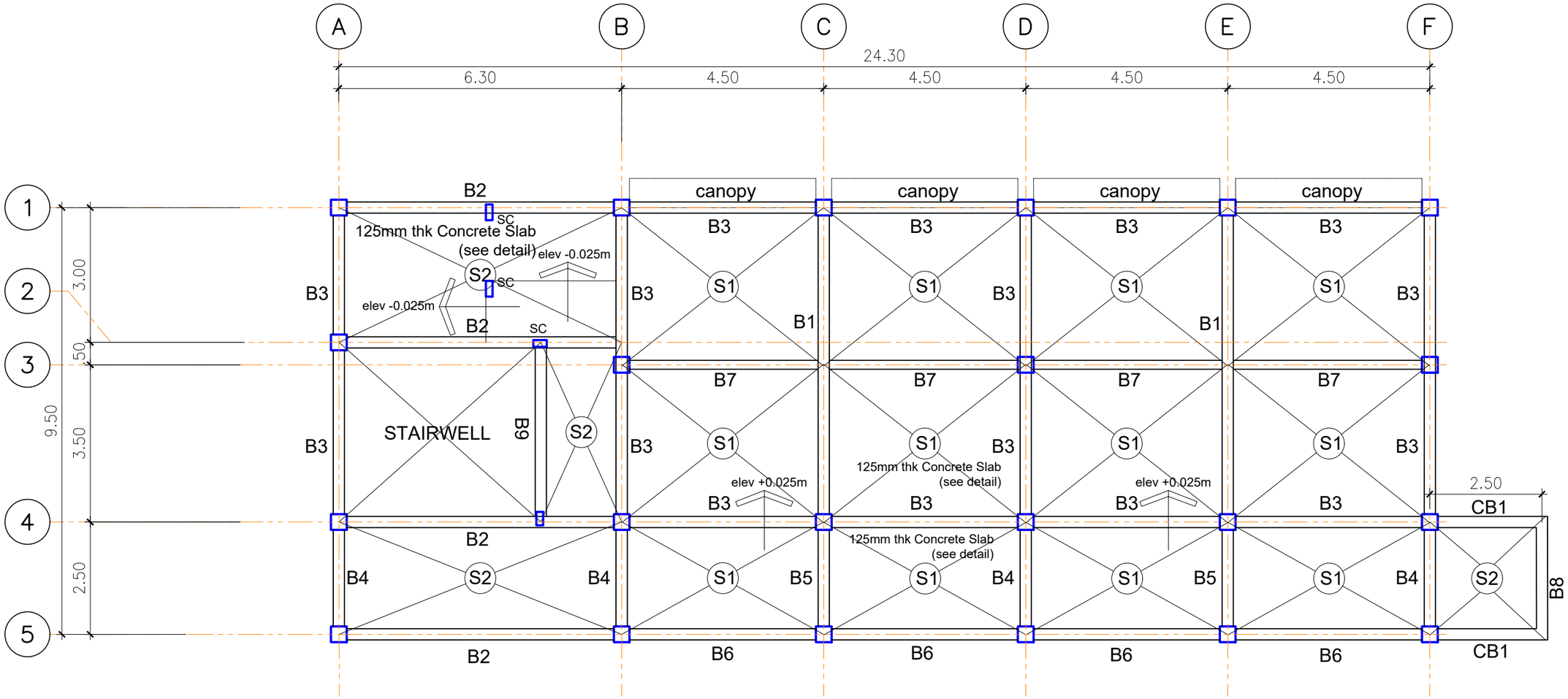

SECOND FLOOR FRAMING PLAN

SCALE 1:100M.

	PROJECT TITLE	PROJECT ENGINEER	RECOMMENDING APPROVAL:	CONCURRED BY:	APPROVED BY:		SPECIAL PROJECT TEAM/ PLANNING & DESIGN	SHEET NO.
REPUBLIC OF THE PHILIPPINES OFFICE OF THE CITY ENGINEER CITY OF NAGA	PROPOSED TWO (2) STOREY, FOUR (4)-CLASSROOM, SCHOOL BUILDING DEL ROSARIO HIGH SCHOOL, BRGY. DEL ROSARIO, NAGA CITY	JEMAEL S. TABINAS ENGINEER II	EMMEL M. ADAQUE ENGINEER III		ALEXANDER N. CANING ACTING CITY ENGINEER	NELSON S. LEGACION CITY MAYOR	KIM R. REFUGIO	S_5 S_{11}

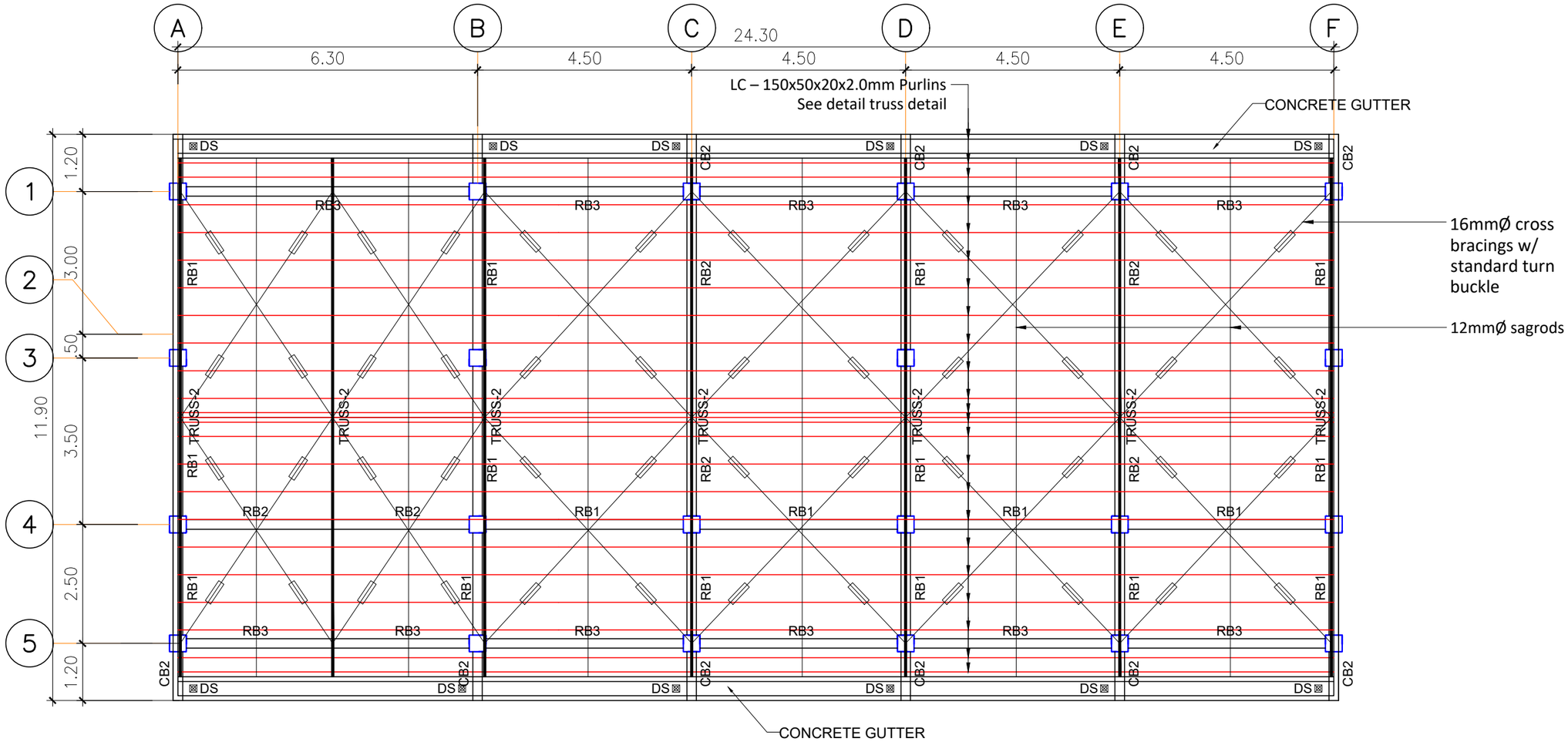

ROOF FRAMING PLAN

SCALE 1:100M.

	PROJECT TITLE	PROJECT ENGINEER	RECOMMENDING APPROVAL:	CONCURRED BY:	APPROVED BY:		SPECIAL PROJECT TEAM/ PLANNING & DESIGN	SHEET NO.
REPUBLIC OF THE PHILIPPINES OFFICE OF THE CITY ENGINEER CITY OF NAGA	PROPOSED TWO (2) STOREY, FOUR (4)-CLASSROOM, SCHOOL BUILDING DEL ROSARIO HIGH SCHOOL, BRGY. DEL ROSARIO, NAGA CITY	JEMAEL S. TABINAS ENGINEER II	EMMEL M. ADAQUE ENGINEER III		ALEXANDER N. CANING ACTING CITY ENGINEER	NELSON S. LEGACION CITY MAYOR	KIM R. REFUGIO	S_6 S_{11}

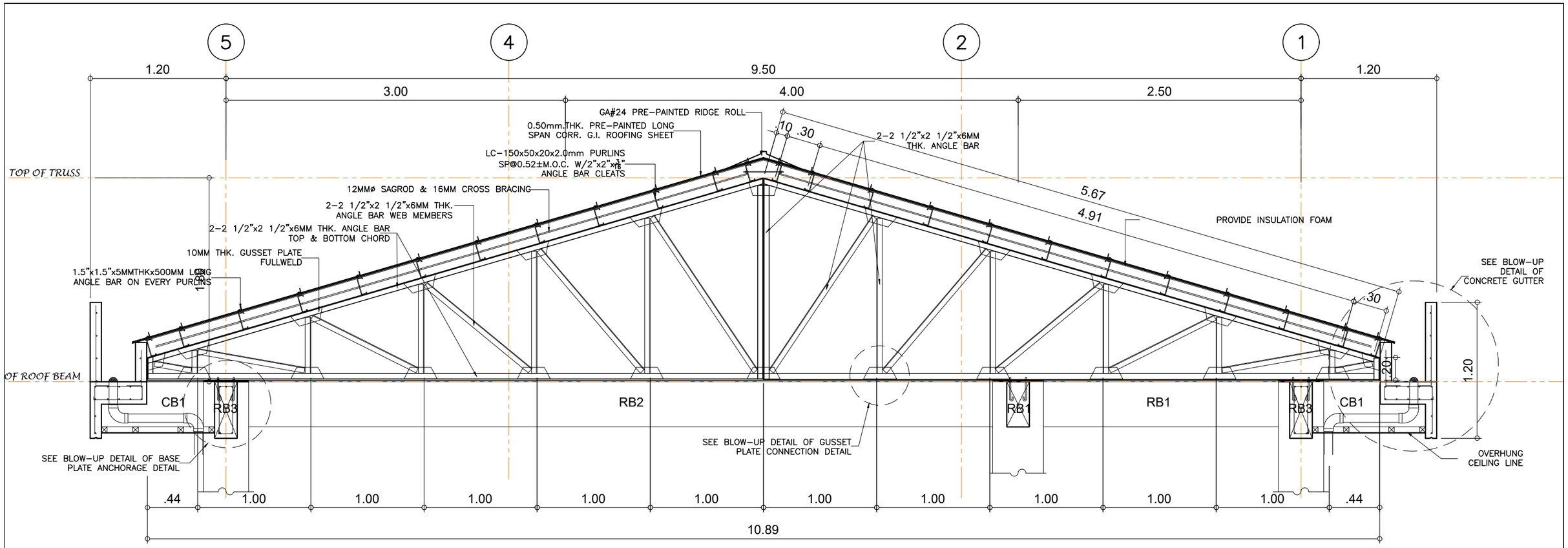

TYPICAL TRUSS DETAIL

SCALE: 1:20M.

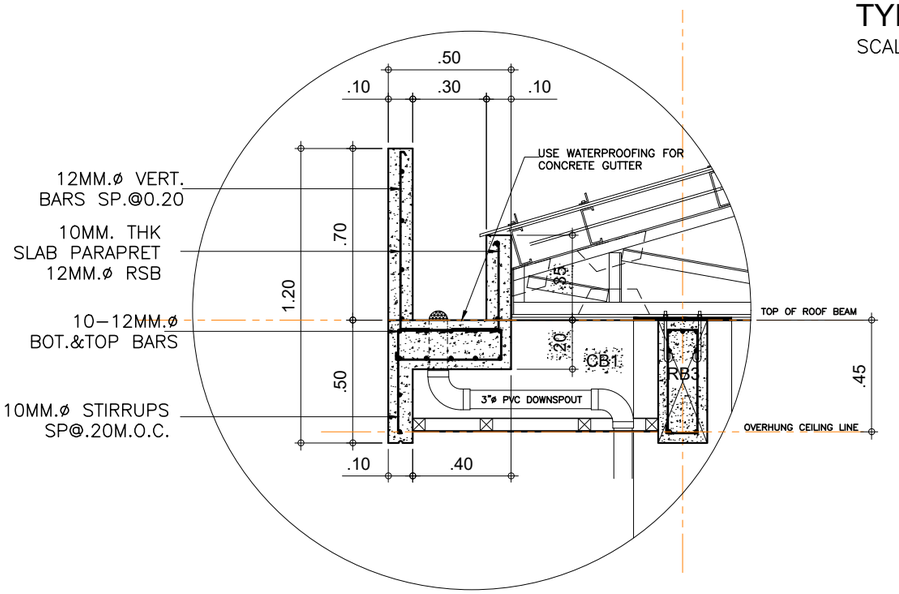

CONCRETE GUTTER DETAIL

SCALE: 1:20M.

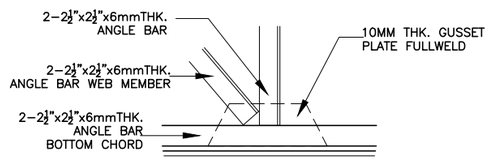

GUSSET PLATE CONNECTION DETAIL

SCALE: 1:10M

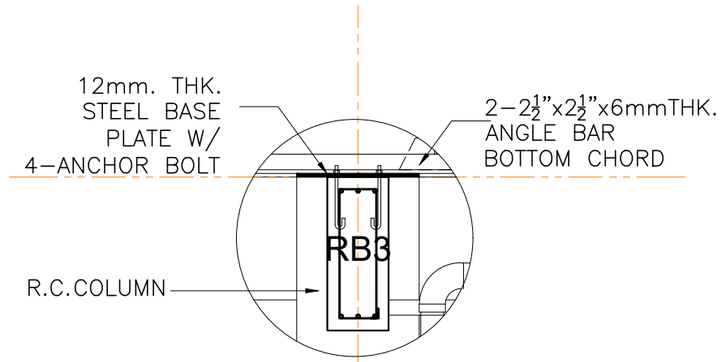

BASE PLATE ANCHORAGE DETAIL

SCALE: 1:20M.

	PROJECT TITLE	PROJECT ENGINEER	RECOMMENDING APPROVAL:	CONCURRED BY:	APPROVED BY:		SPECIAL PROJECT TEAM/ PLANNING & DESIGN	SHEET NO.
REPUBLIC OF THE PHILIPPINES OFFICE OF THE CITY ENGINEER CITY OF NAGA	PROPOSED TWO (2) STOREY, FOUR (4)-CLASSROOM, SCHOOL BUILDING DEL ROSARIO HIGH SCHOOL, BRGY. DEL ROSARIO, NAGA CITY	JEMAEL S. TABINAS ENGINEER II	EMMEL M. ADAQUE ENGINEER III		ALEXANDER N. CANING ACTING CITY ENGINEER	NELSON S. LEGACION CITY MAYOR	KIM R. REFUGIO	S7 S11

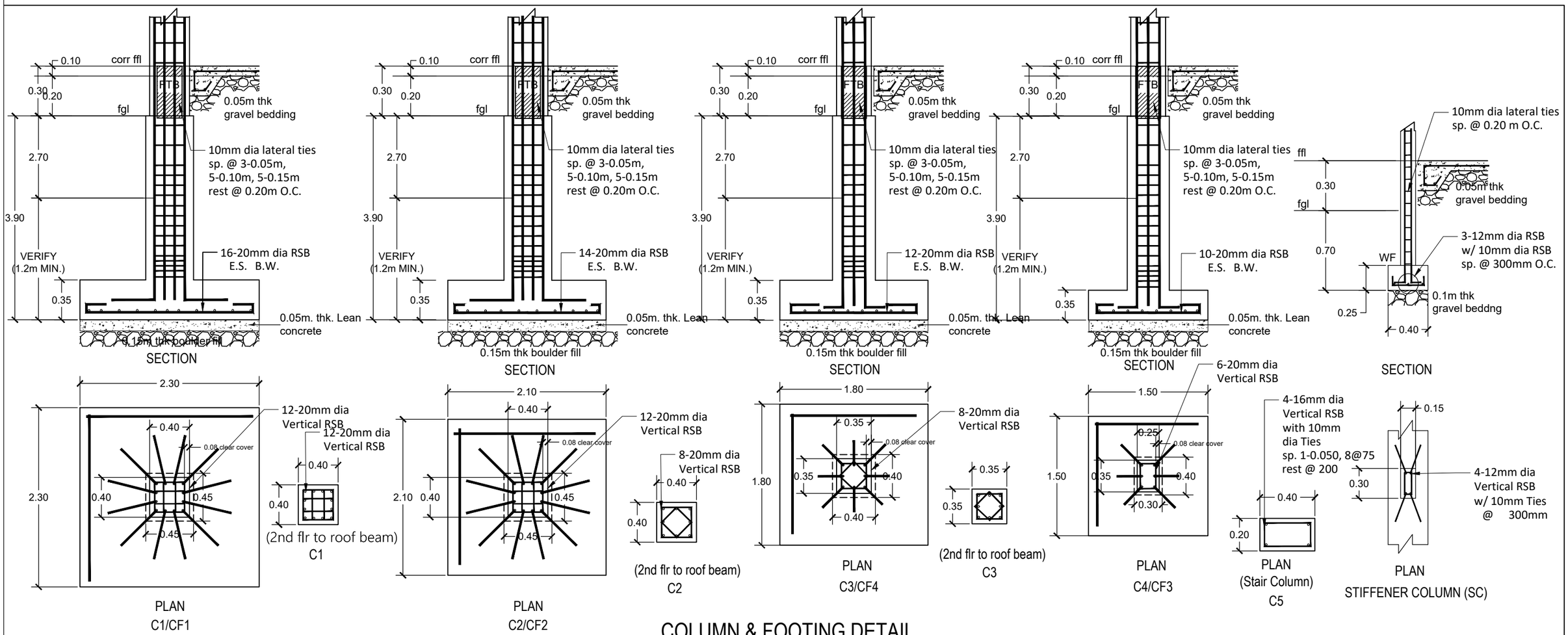

COLUMN & FOOTING DETAIL

SCALE NTS

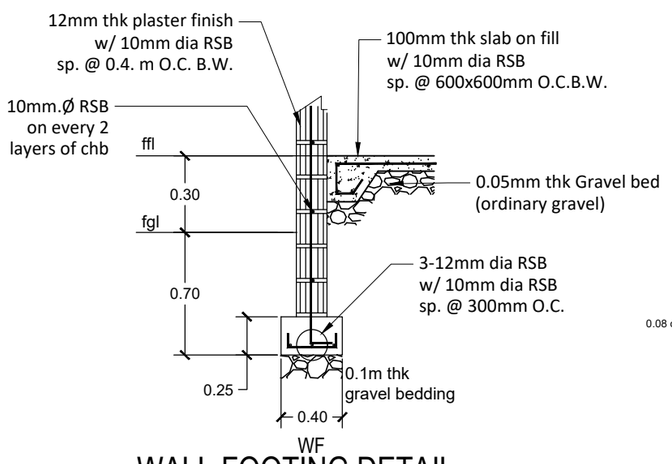

WALL FOOTING DETAIL

SCALE 1:40

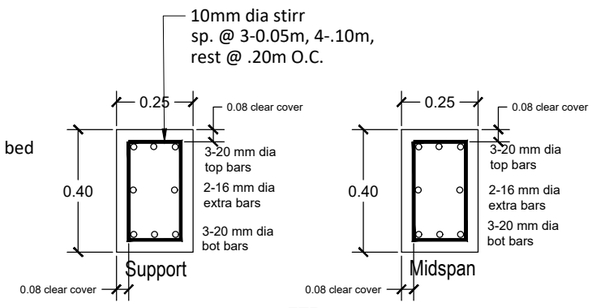

FTB 1

TIE BEAM SECTION

SCALE NTS

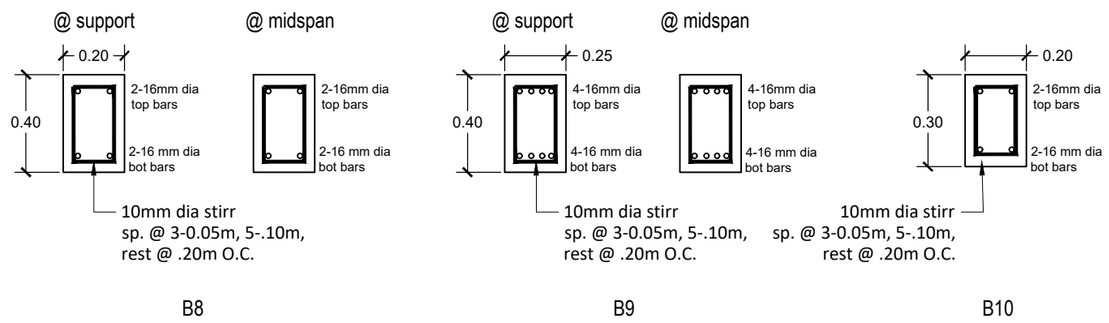

BEAM SECTIONS

SCALE 1:20

	PROJECT TITLE	PROJECT ENGINEER	RECOMMENDING APPROVAL:	CONCURRED BY:	APPROVED BY:		SPECIAL PROJECT TEAM/ PLANNING & DESIGN	SHEET NO.
REPUBLIC OF THE PHILIPPINES OFFICE OF THE CITY ENGINEER CITY OF NAGA	PROPOSED TWO (2) STOREY, FOUR (4)-CLASSROOM, SCHOOL BUILDING DEL ROSARIO HIGH SCHOOL, BRGY. DEL ROSARIO, NAGA CITY	JEMAEL S. TABINAS ENGINEER II	EMMEL M. ADAQUE ENGINEER III		ALEXANDER N. CANING ACTING CITY ENGINEER	NELSON S. LEGACION CITY MAYOR	KIM R. REFUGIO	S8 S11

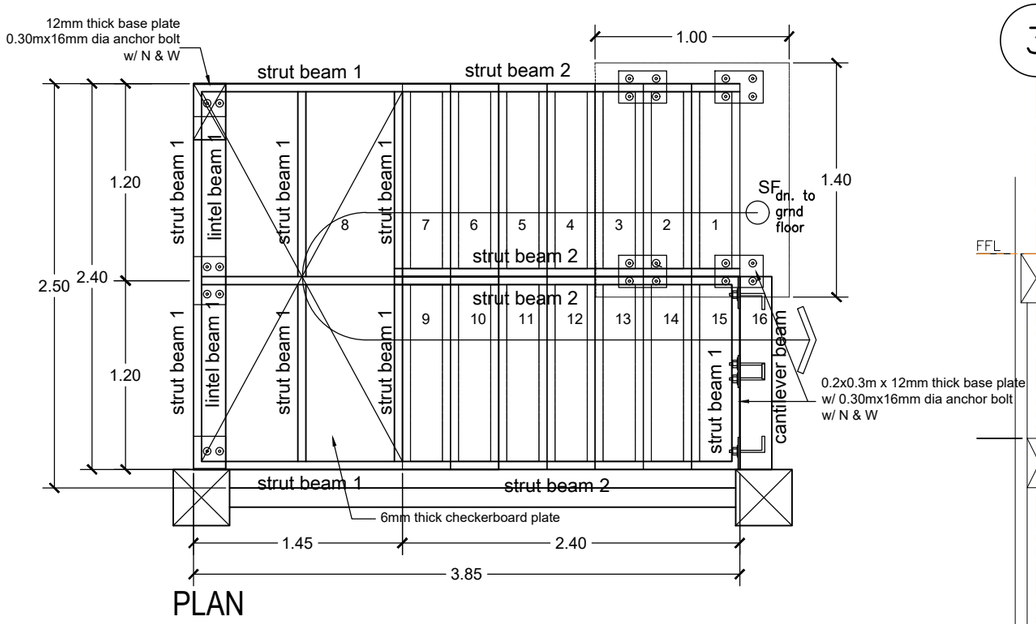

PLAN

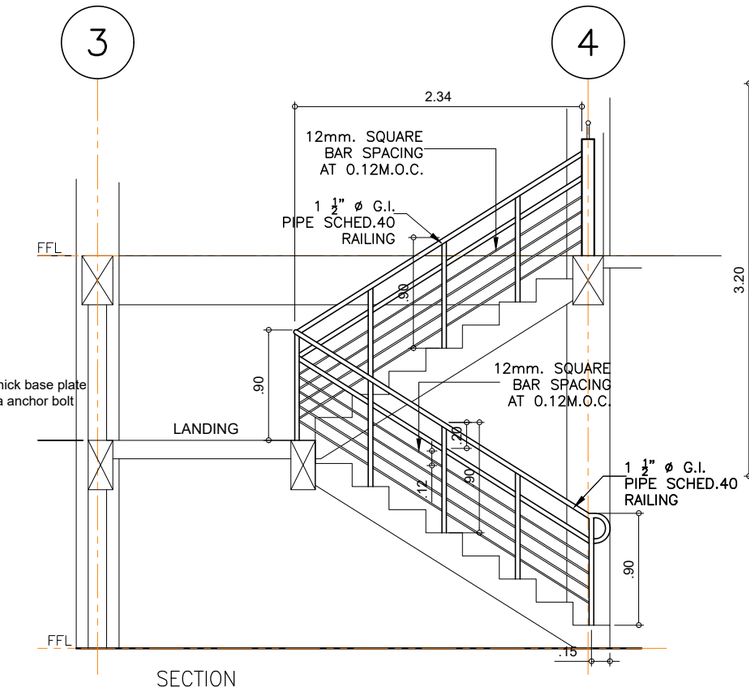

SECTION

RAILING DETAIL
SCALE 1:50M.

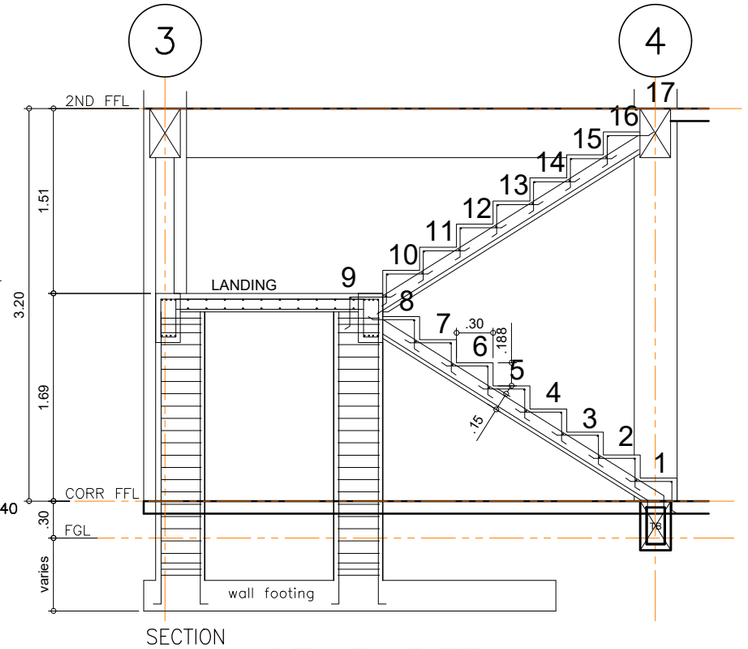

SECTION

STAIR DETAIL
SCALE 1:50M.

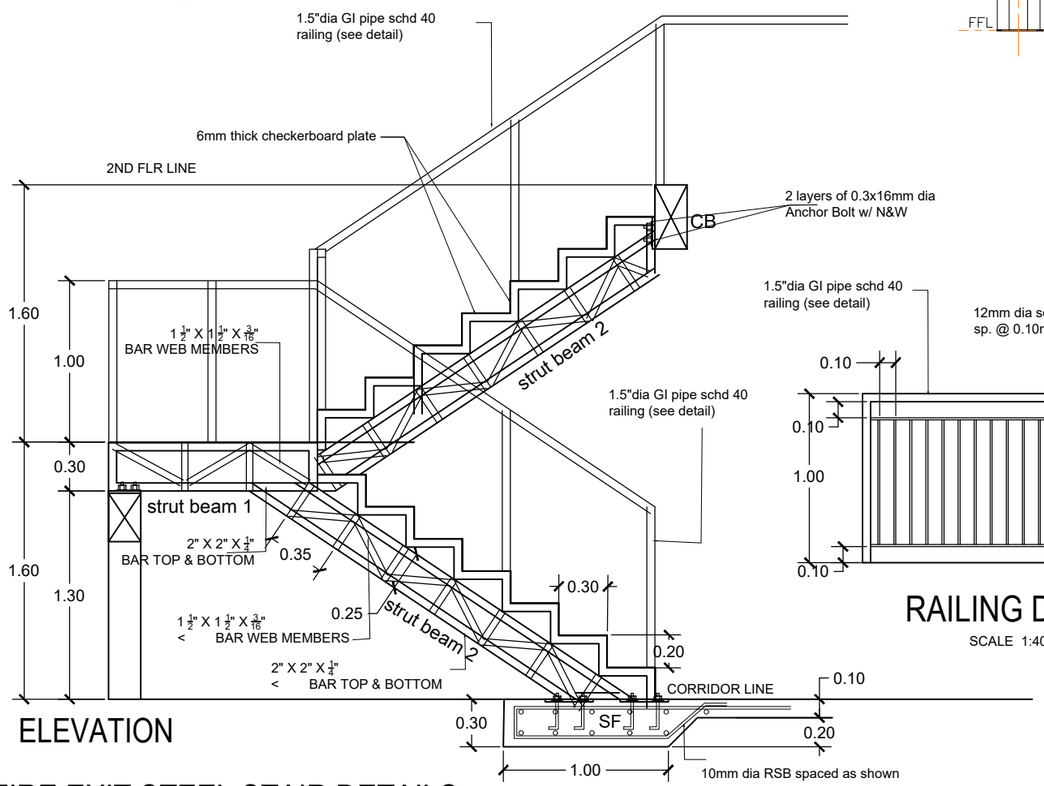

ELEVATION

FIRE EXIT STEEL STAIR DETAILS
SCALE 1:40

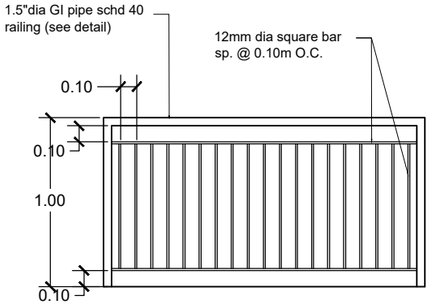

RAILING DETAIL
SCALE 1:40

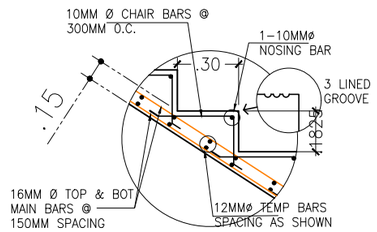

STAIR REINFORCEMENT LAYOUT
SCALE 1:30M

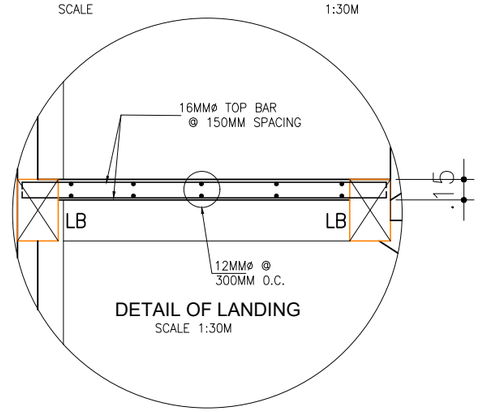

DETAIL OF LANDING
SCALE 1:30M

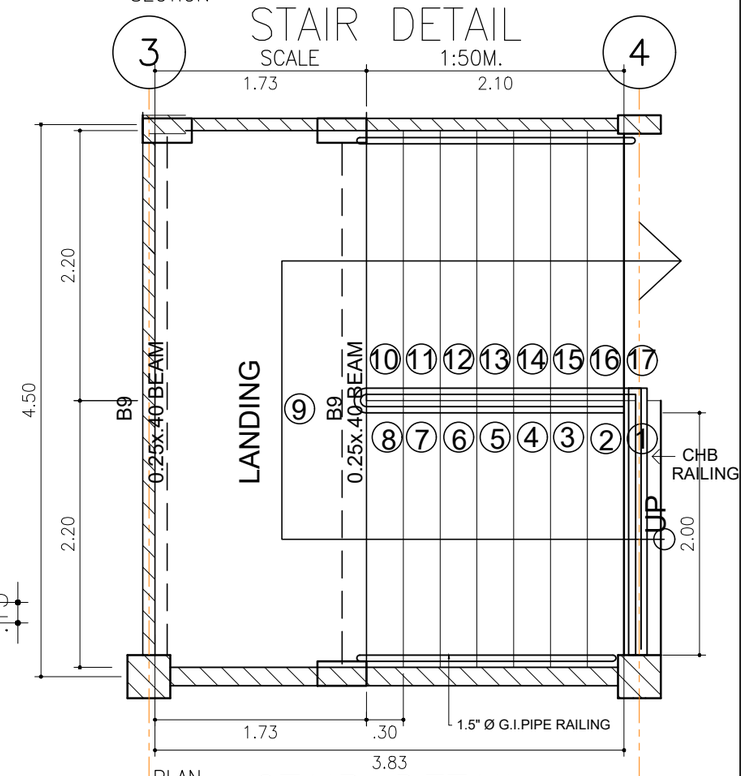

PLAN

STAIR DETAIL
SCALE 1:50M.

	PROJECT TITLE	PROJECT ENGINEER	RECOMMENDING APPROVAL:	CONCURRED BY:	APPROVED BY:		SPECIAL PROJECT TEAM/ PLANNING & DESIGN	SHEET NO.
REPUBLIC OF THE PHILIPPINES OFFICE OF THE CITY ENGINEER CITY OF NAGA	PROPOSED TWO (2) STOREY, FOUR (4)-CLASSROOM, SCHOOL BUILDING DEL ROSARIO HIGH SCHOOL, BRGY. DEL ROSARIO, NAGA CITY	JEMAEL S. TABINAS ENGINEER II	EMMEL M. ADAQUE ENGINEER III		ALEXANDER N. CANING ACTING CITY ENGINEER	NELSON S. LEGACION CITY MAYOR	KIM R. REFUGIO	S9 S11

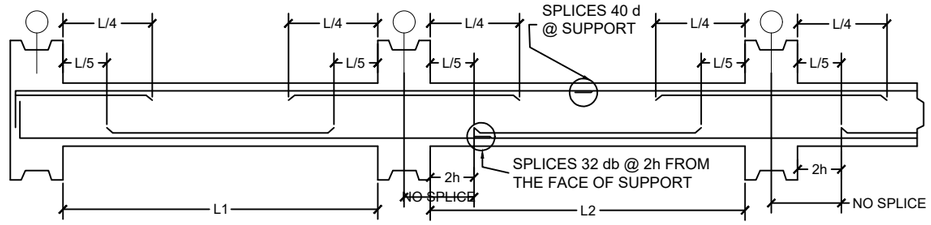

WHERE:
db = BAR DIAMETER
h = DEPTH OF BEAM

USE : 10mmØ STIRRUPS SPACED @ 3 @ 50mm, 5 @ 100mm, 5 @ 150mm & REST SP. @ 200mm O.C.

BEAM REINFORCEMENT LAYOUT

SCALE NTS

MARK	@ LEFT SUPPORT	@ MID-SPAN	@ RIGHT SUPPORT
B1	300 × 500 3-20mmØ TOP BAR 2-20mmØ TOP BAR 2-16mmØ STIFFENER 3-20mmØ BOT BAR	3-20mmØ TOP BAR 2-16mmØ STIFFENER 2-20mmØ TOP BAR 3-20mmØ TOP BAR	3-20mmØ TOP BAR 2-20mmØ TOP BAR 2-16mmØ STIFFENER 3-20mmØ BOT BAR
B2	300 × 400 3-20mmØ TOP BAR 2-20mmØ TOP BAR 2-16mmØ STIFFENER 3-20mmØ BOT BAR	3-20mmØ BOT BAR 2-16mmØ STIFFENER 2-20mmØ TOP BAR 3-20mmØ BOT BAR	3-20mmØ BOT BAR 2-20mmØ TOP BAR 2-16mmØ STIFFENER 3-20mmØ BOT BAR
B3	250 × 400 4-20mmØ TOP BAR 2-20mmØ BOT BAR	2-20mmØ TOP BAR 4-20mmØ BOT BAR	4-20mmØ TOP BAR 2-20mmØ BOT BAR
B4	250 × 400 2-20mmØ TOP BAR 2-20mmØ TOP BAR 2-20mmØ BOT BAR	2-20mmØ TOP BAR 2-20mmØ BOT BAR 2-20mmØ BOT BAR	4-20mmØ TOP BAR 2-20mmØ BOT BAR
B5	250 × 400 3-20mmØ TOP BAR 2-20mmØ TOP BAR 2-20mmØ BOT BAR	3-20mmØ TOP BAR 2-20mmØ TOP BAR 2-20mmØ BOT BAR	3-20mmØ TOP BAR 2-20mmØ TOP BAR 2-20mmØ BOT BAR

MARK	@ LEFT SUPPORT	@ MID-SPAN	@ RIGHT SUPPORT
B6	250 × 400 3-20mmØ TOP BAR 2-20mmØ BOT BAR	2-20mmØ TOP BAR 3-20mmØ BOT BAR	3-20mmØ TOP BAR 2-20mmØ BOT BAR
B7	250 × 400 5-20mmØ TOP BAR 3-20mmØ BOT BAR	3-20mmØ TOP BAR 3-20mmØ BOT BAR	3-20mmØ TOP BAR 3-20mmØ BOT BAR
CB1	250 × 400 4-20mmØ TOP BAR 2-20mmØ BOT BAR	4-20mmØ TOP BAR 2-20mmØ BOT BAR	4-20mmØ TOP BAR 2-20mmØ BOT BAR
CB2	250 × 400 4-20mmØ TOP BAR 2-20mmØ BOT BAR	4-20mmØ TOP BAR 2-20mmØ BOT BAR	4-20mmØ TOP BAR 2-20mmØ BOT BAR
RB1	200 × 400 2-20mmØ TOP BAR 2-20mmØ BOT BAR	2-20mmØ TOP BAR 2-20mmØ BOT BAR	2-20mmØ TOP BAR 2-20mmØ BOT BAR
RB2	200 × 400 3-20mmØ TOP BAR 3-20mmØ BOT BAR	3-20mmØ TOP BAR 3-20mmØ BOT BAR	3-20mmØ TOP BAR 3-20mmØ BOT BAR
RB3	200 × 500 (400) 3-20mmØ TOP BAR 3-20mmØ BOT BAR	3-20mmØ TOP BAR 3-20mmØ BOT BAR	3-20mmØ TOP BAR 3-20mmØ BOT BAR

BEAM SECTIONS

SCALE 1:20

REPUBLIC OF THE PHILIPPINES OFFICE OF THE CITY ENGINEER CITY OF NAGA	PROJECT TITLE PROPOSED TWO (2) STOREY, FOUR (4)-CLASSROOM, SCHOOL BUILDING DEL ROSARIO HIGH SCHOOL, BRGY. DEL ROSARIO, NAGA CITY	PROJECT ENGINEER JEMAEL S. TABINAS ENGINEER II	RECOMMENDING APPROVAL: EMMEL M. ADAQUE ENGINEER III	CONCURRED BY:	APPROVED BY: ALEXANDER N. CANING ACTING CITY ENGINEER	NELSON S. LEGACION CITY MAYOR	SPECIAL PROJECT TEAM/ PLANNING & DESIGN KIM R. REFUGIO	SHEET NO. S10 S11

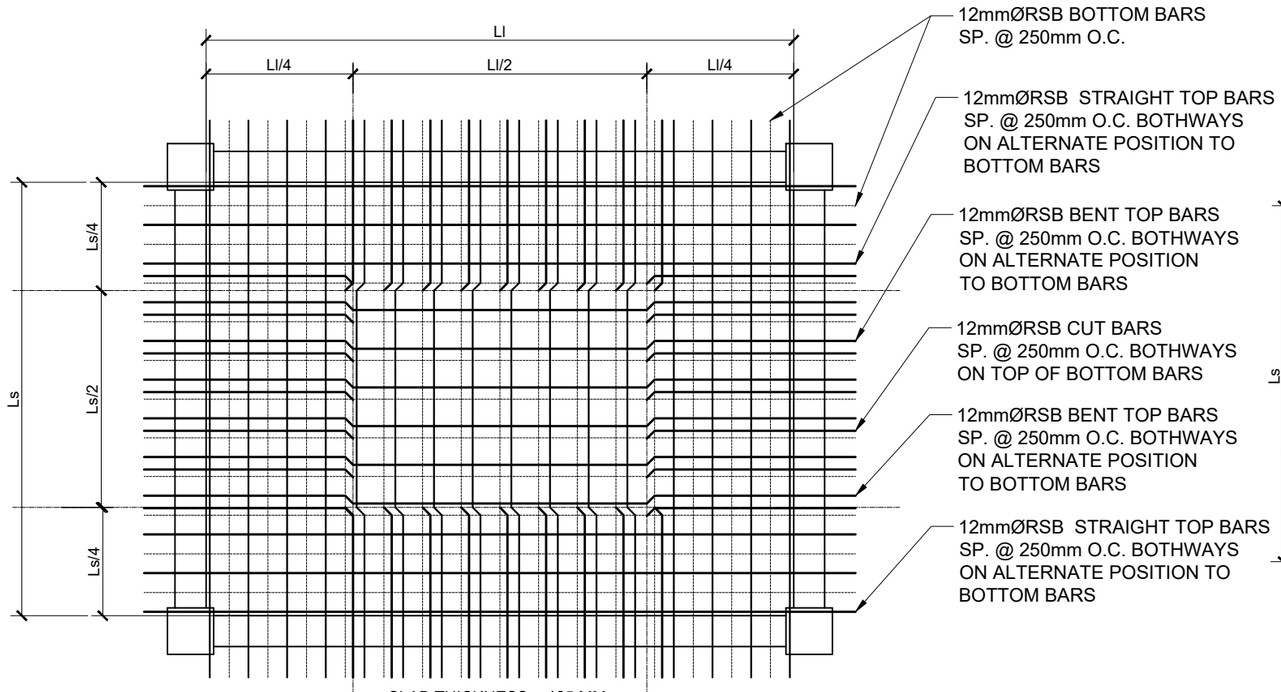

DETAIL OF SLAB 1

SCALE NTS

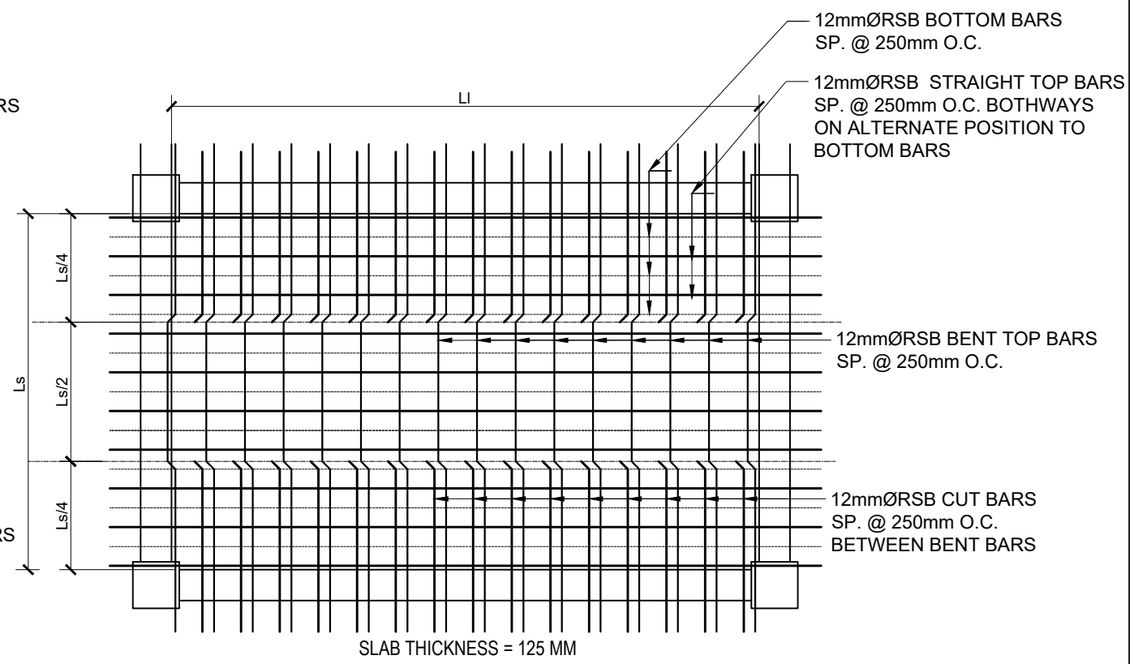

DETAIL OF SLAB 2

SCALE NTS

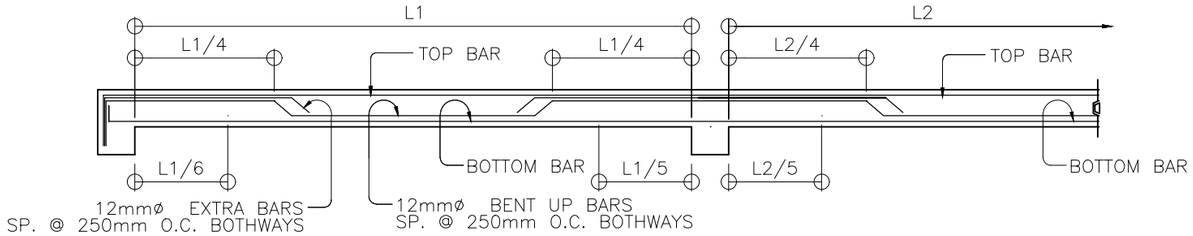

TYPICAL SLAB REINFORCEMENT LAYOUT

SCALE NTS

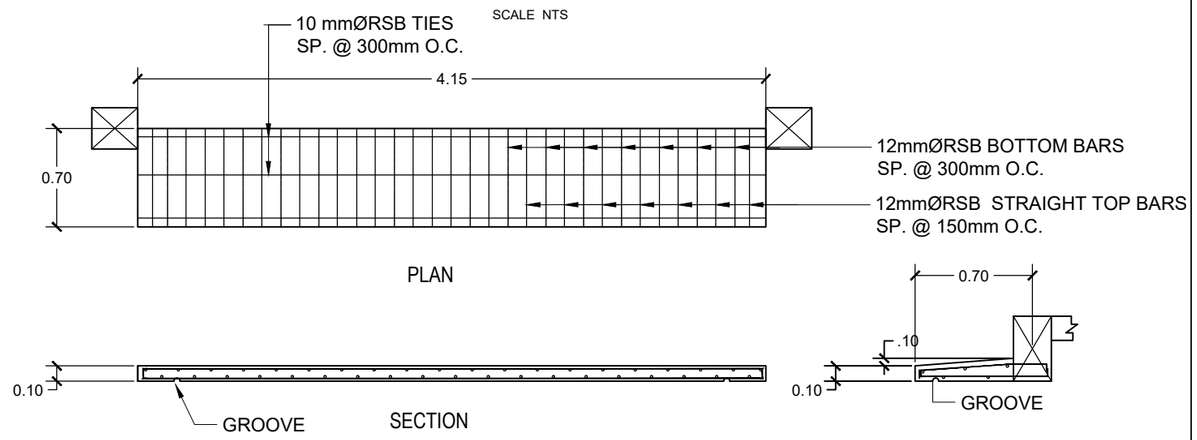

DETAIL OF CONCRETE CANOPY

SCALE NTS

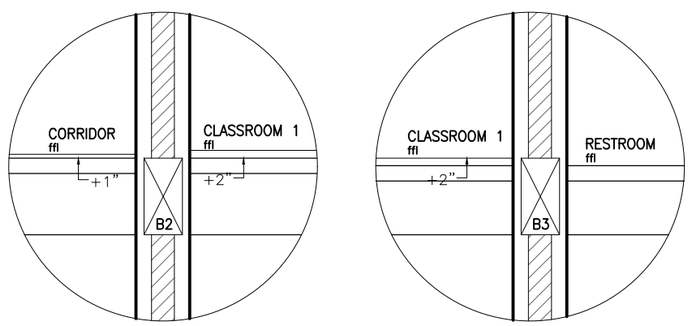

FLOOR DETAIL 1
SCALE 1:30mts

FLOOR DETAIL 2
SCALE 1:30mts

	PROJECT TITLE	PROJECT ENGINEER	RECOMMENDING APPROVAL:	CONCURRED BY:	APPROVED BY:		SPECIAL PROJECT TEAM/ PLANNING & DESIGN	SHEET NO.
REPUBLIC OF THE PHILIPPINES OFFICE OF THE CITY ENGINEER CITY OF NAGA	PROPOSED TWO (2) STOREY, FOUR (4)-CLASSROOM, SCHOOL BUILDING DEL ROSARIO HIGH SCHOOL, BRGY. DEL ROSARIO, NAGA CITY	JEMAEL S. TABINAS ENGINEER II	EMMEL M. ADAQUE ENGINEER III		ALEXANDER N. CANING ACTING CITY ENGINEER	NELSON S. LEGACION CITY MAYOR	KIM R. REFUGIO	S11 S11